TABLE OF CONTENTS

GRP (Glass Fiber Reinforced Pipe)

FLANGE

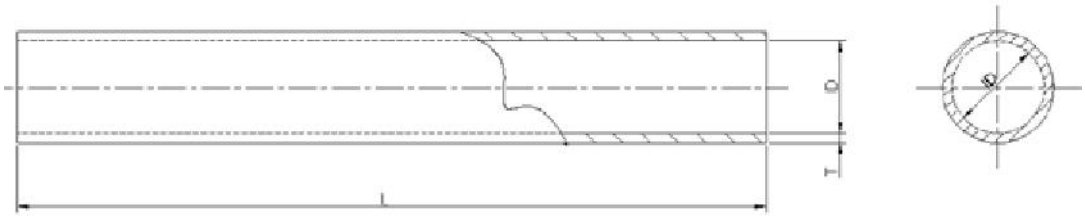

Dimension Table

Design Pressure: 3 Barg – 10 Barg

Nominal Dia		L	Nominal wall thickness, T PN 3	Nominal wall thickness, T PN 4	Nominal wall thickness, T PN 5	Nominal wall thickness, T PN 6	Nominal wall thickness, T PN 7	Nominal wall thickness, T PN 8	Nominal wall thickness, T PN 9	Nominal wall thickness, T PN 10
mm	inch									
15	1/2	13,000	4.3	4.3	4.3	4.3	4.3	4.3	4.3	4.3
20	3/4	3,000	4.3	4.3	4.3	4.3	4.3	4.3	4.3	4.3
25	1	3,000	4.3	4.3	4.3	4.3	4.3	4.3	4.3	4.3
32	1 1/4	3,000	4.3	4.3	4.3	4.3	4.3	4.3	4.3	4.3
40	1 1/2	3,000	4.3	4.3	4.3	4.3	4.3	4.3	4.3	4.3
50	2	5,850	4.3	4.3	4.3	4.3	4.3	4.3	4.3	4.3
65	2 1/2	5,850	4.3	4.3	4.3	4.3	4.3	4.3	4.3	4.3
80	3	5,850	4.3	4.3	4.3	4.3	4.3	4.3	4.3	4.3
100	4	5,850	4.3	4.3	4.3	4.3	4.3	4.3	4.3	4.3
125	5	5,850	4.3	4.3	4.3	4.3	4.3	4.3	4.3	4.5
150	6	11,890	4.3	4.3	4.3	4.3	4.3	4.4	4.7	5.0
200	8	11,890	4.3	4.3	4.3	4.4	4.8	5.1	5.5	5.8
250	10	11,890	4.3	4.3	4.5	5.0	5.4	5.8	6.3	6.7
300	12	11,890	4.3	4.4	5.0	5.5	6.0	6.5	7.1	7.6
350	14	11,890	4.3	4.8	5.4	6.0	6.6	7.2	7.8	8.5
400	16	11,890	4.4	5.1	5.8	6.5	7.2	7.9	8.6	9.3
450	18	11,890	4.7	5.5	6.3	7.0	7.8	8.6	9.4	10.2
500	20	11,890	4.9	5.8	6.7	7.6	8.4	9.3	10.2	11.1
600	24	11,890	5.5	6.5	7.6	8.6	9.7	10.7	11.8	12.8
650	26	11,890	5.7	6.9	8.0	9.1	10.3	11.4	12.6	13.7
700	28	11,890	6.0	7.2	8.4	9.6	10.9	12.1	13.3	14.6
750	30	11,890	6.2	7.5	8.9	10.2	11.5	12.8	14.1	15.5
800	32	11,890	6.5	7.9	9.3	10.7	12.1	13.5	14.9	16.3
900	36	11,890	7.0	8.6	10.2	11.7	13.3	14.9	16.5	18.1
1000	40	11,890	7.5	9.3	11.0	12.8	14.5	16.3	18.1	19.8
1050	42	11,890	7.8	9.6	11.5	13.3	15.1	17.0	18.8	20.7

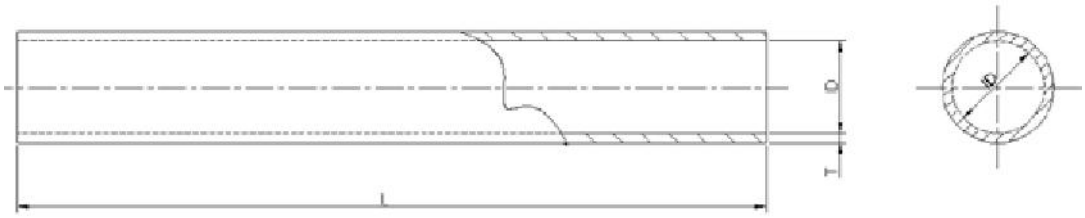

Dimension Table

Design Pressure: 3 Barg – 10 Barg

Nominal Dia		L	Nominal wall thickness, T PN 3	Nominal wall thickness, T PN 4	Nominal wall thickness, T PN 5	Nominal wall thickness, T PN 6	Nominal wall thickness, T PN 7	Nominal wall thickness, T PN 8	Nominal wall thickness, T PN 9	Nominal wall thickness, T PN 10
mm	inch									
1,100	44	11,890	8.1	10.0	11.9	13.8	15.7	17.7	19.6	21.6
1,200	48	11,890	8.6	10.7	12.8	14.9	17.0	19.1	21.2	23.3
1,300	52	11,890	9.1	11.4	13.6	15.9	18.2	20.5	22.8	25.1
1,350	54	11,890	9.4	11.7	14.1	16.4	18.8	21.2	23.6	25.9
1,400	56	11,890	9.6	12.1	14.5	16.9	19.4	21.9	24.3	26.8
1,500	60	11,890	10.1	12.7	15.4	18.0	20.6	23.3	25.9	28.6
1,600	64	11,890	10.7	13.4	16.2	19.0	21.8	24.7	27.5	30.3
1,700	68	11,890	11.2	14.1	17.1	20.1	23.1	26.0	29.1	32.1
1,800	72	11,890	11.7	14.8	18.0	21.1	24.3	27.4	30.6	33.8
1,900	76	11,890	12.2	15.5	18.8	22.2	25.5	28.8	32.2	35.6
2,000	80	11,890	12.7	16.2	19.7	23.2	26.7	30.2	33.8	37.3
2,100	84	11,890	13.2	16.9	20.6	24.2	27.9	31.6	35.3	39.1
2,200	88	11,890	13.8	17.6	21.4	25.3	29.1	33.0	36.9	40.8
2,300	92	11,890	14.3	18.3	22.3	26.3	30.4	34.4	38.5	42.6
2,400	96	11,890	14.8	19.0	23.2	27.4	31.6	35.8	40.0	44.3
2,500	100	11,890	15.3	19.7	24.0	28.4	32.8	37.2	41.6	46.0
2,600	104	5,850	15.8	20.4	24.9	29.5	34.0	38.6	43.2	47.8
2,700	108	5,850	16.4	21.1	25.8	30.5	35.2	40.0	44.8	49.5
2,800	112	5,850	16.9	21.8	26.6	31.5	36.5	41.4	46.3	51.3
2,900	116	5,850	17.4	22.4	27.5	32.6	37.7	42.8	47.9	53.0
3,000	120	5,850	17.9	23.1	28.4	33.6	38.9	44.2	49.5	54.8

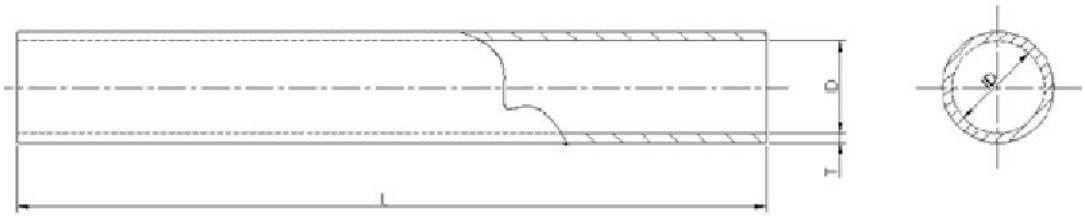

Dimension Table

Design Pressure: 11 Barg – 20 Barg

Nominal Dia		L	Nominal wall thickness, T PN 11	Nominal wall thickness, T PN 12	Nominal wall thickness, T PN 13	Nominal wall thickness, T PN 14	Nominal wall thickness, T PN 15	Nominal wall thickness, T PN 16	Nominal wall thickness, T PN 17	Nominal wall thickness, T PN 18	Nominal wall thickness, T PN 19	Nominal wall thickness, T PN 20
mm	inch											
15	1/2	3,000	4.3	4.3	4.3	4.3	4.3	4.3	4.3	4.3	4.3	4.3
20	3/4	3,000	4.3	4.3	4.3	4.3	4.3	4.3	4.3	4.3	4.3	4.3
25	1	3,000	4.3	4.3	4.3	4.3	4.3	4.3	4.3	4.3	4.3	4.3
32	1 1/4	3,000	4.3	4.3	4.3	4.3	4.3	4.3	4.3	4.3	4.3	4.3
40	1 1/2	3,000	4.3	4.3	4.3	4.3	4.3	4.3	4.3	4.3	4.3	4.3
50	2	5,850	4.3	4.3	4.3	4.3	4.3	4.3	4.3	4.3	4.3	4.3
65	2 1/2	5,850	4.3	4.3	4.3	4.3	4.3	4.3	4.3	4.3	4.5	4.6
80	3	5,850	4.3	4.3	4.3	4.3	4.3	4.5	4.6	4.7	4.9	5.0
100	4	5,850	4.3	4.5	4.6	4.8	5.0	5.2	5.4	5.5	5.7	5.9
125	5	5,850	4.8	5.0	5.2	5.4	5.7	5.9	6.1	6.3	6.6	6.8
150	6	11,890	5.2	5.5	5.8	6.0	6.3	6.6	6.9	7.1	7.4	7.7
200	8	11,890	6.2	6.6	6.9	7.3	7.6	8.0	8.4	8.7	9.1	9.4
250	10	11,890	7.2	7.6	8.1	8.5	9.0	9.4	9.9	10.3	10.8	11.2
300	12	11,890	8.1	8.7	9.2	9.7	10.3	10.8	11.4	11.9	12.4	13.0
350	14	11,890	9.1	9.7	10.3	11.0	11.6	12.2	12.9	13.5	14.1	14.8
400	16	11,890	10.1	10.8	11.5	12.2	12.9	13.6	14.4	15.1	15.8	16.5
450	18	11,890	11.0	11.8	12.6	13.4	14.2	15.0	15.9	16.7	17.5	18.3
500	20	11,890	12.0	12.9	13.8	14.7	15.6	16.5	17.4	18.3	19.2	20.1
600	24	11,890	13.9	15.0	16.0	17.1	18.2	19.3	20.4	21.5	22.5	23.6
650	26	11,890	14.9	16.0	17.2	18.4	19.5	20.7	21.9	23.0	24.2	25.4
700	28	11,890	15.8	17.1	18.3	19.6	20.8	22.1	23.4	24.6	25.9	27.2
750	30	11,890	16.8	18.1	19.5	20.8	22.2	23.5	24.9	26.2	27.0	29.0
800	32	11,890	17.8	19.2	20.6	22.0	23.5	24.9	26.4	27.8	29.3	30.7
900	36	11,890	19.7	21.3	22.9	24.5	26.1	27.7	29.4	31.0	32.6	34.3
1,000	40	11,890	21.6	23.4	25.2	27.0	28.8	30.6	32.4	34.2	36.0	37.8
1,050	42	11,890	22.6	24.4	26.3	28.2	30.1	32.0	33.9	35.8	37.7	39.6

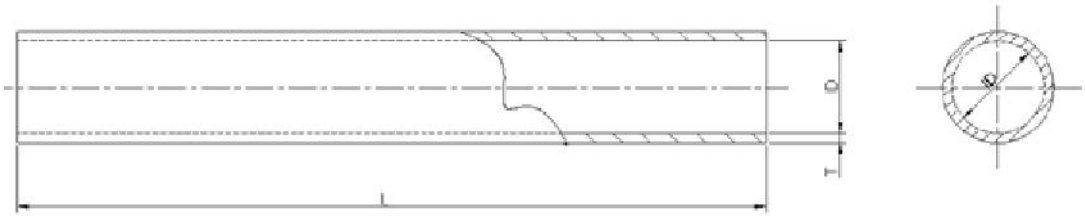

Dimension Table

Design Pressure: 11 Barg – 20 Barg

Nominal Dia		L	Nominal wall thickness, t PN 11	Nominal wall thickness, t PN 12	Nominal wall thickness, t PN 13	Nominal wall thickness, t PN 14	Nominal wall thickness, t PN 15	Nominal wall thickness, t PN 16	Nominal wall thickness, t PN 17	Nominal wall thickness, t PN 18	Nominal wall thickness, t PN 19	Nominal wall thickness, t PN 20
mm	inch											
1,100	44	11,890	23.5	25.5	27.5	29.4	31.4	33.4	35.4	37.4	39.4	41.4
1,200	48	11,890	25.5	27.6	29.7	31.9	34.0	36.2	38.4	40.6	42.7	44.9
1,300	52	11,890	27.4	29.7	32.0	34.4	36.7	39.0	41.4	43.7	46.1	48.5
1,350	54	11,890	28.3	30.8	33.2	35.6	38.0	40.4	42.9	45.3	47.8	50.3
1,400	56	11,890	29.3	31.8	34.3	36.8	39.3	41.9	44.4	46.9	49.5	52.0
1,500	60	11,890	31.2	33.9	36.6	39.3	42.0	44.7	47.4	50.1	52.8	55.6
1,600	64	11,890	33.2	36.0	38.9	41.7	44.6	47.5	50.4	53.3	56.2	59.1
1,700	68	11,890	35.1	38.1	41.2	44.2	47.3	50.3	53.4	56.5	59.6	62.7
1,800	72	11,890	37.0	40.2	43.4	46.7	49.9	53.1	56.4	59.7	62.9	66.2
1,900	76	11,890	38.9	42.3	45.7	49.1	52.5	56.0	59.4	62.9	66.3	69.8
2,000	80	11,890	40.9	44.4	48.0	51.6	55.2	58.8	62.4	66.0	69.7	73.3
2,100	84	11,890	42.8	46.5	50.3	54.0	57.8	61.6	65.4	69.2	73.0	76.9
2,200	88	11,890	44.7	48.6	52.6	56.5	60.5	64.4	68.4	72.4	76.4	80.4
2,300	92	11,890	46.6	50.7	54.8	59.0	63.1	67.3	71.4	75.6	79.8	84.0
2,400	96	11,890	48.6	52.8	57.1	61.4	65.7	70.1	74.4	78.8	83.1	87.5
2,500	100	11,890	50.5	54.9	59.4	63.9	68.4	72.9	77.4	82.0	86.5	91.1
2,600	104	5,850	52.4	57.0	61.7	66.4	71.0	75.7	80.4	85.1	89.9	94.6
2,700	108	5,850	54.3	59.2	64.0	68.8	73.7	78.5	83.4	88.3	93.2	98.2
2,800	112	5,850	56.3	61.3	66.3	71.3	76.3	81.4	86.4	91.5	96.6	101.7
2,900	116	5,850	58.2	63.4	68.5	73.7	79.0	84.2	89.4	94.7	100.0	105.3
3,000	120	5,850	60.1	65.5	70.8	76.2	81.6	87.0	92.4	97.9	103.3	108.8

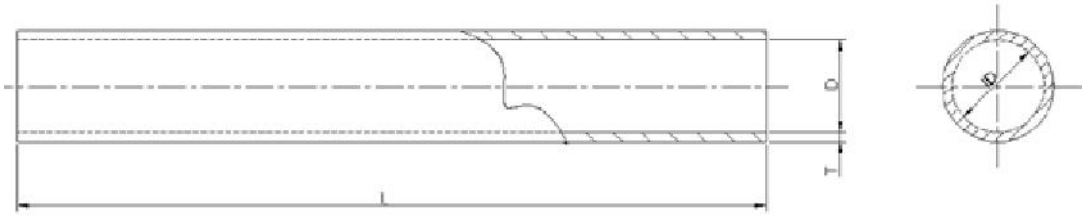

Dimension Table

STIFFNESS: SN1250 - SN10000 N/m2

Nominal Dia		L	Nominal wall thickness, T SN1250	Nominal wall thickness, T SN2500	Nominal wall thickness, T SN5000	Nominal wall thickness, T SN10000
mm	inch					
15	1/2	3,000	4.3	4.3	4.3	4.3
20	3/4	3,000	4.3	4.3	4.3	4.3
25	1	3,000	4.3	4.3	4.3	4.3
32	1 1/4	3,000	4.3	4.3	4.3	4.3
40	1 1/2	3,000	4.3	4.3	4.3	4.3
50	2	5,850	4.3	4.3	4.3	4.3
65	2 1/2	5,850	4.3	4.3	4.3	4.3
80	3	5,850	4.3	4.3	4.3	4.3
100	4	5,850	4.3	4.3	4.3	4.3
125	5	5,850	4.3	4.3	4.3	4.3
150	6	11,890	4.3	4.3	4.3	4.3
200	8	11,890	4.3	4.3	4.3	4.3
250	10	11,890	4.3	4.3	4.3	4.5
300	12	11,890	4.3	4.3	4.3	5.3
350	14	11,890	4.3	4.3	4.9	6.2
400	16	11,890	4.3	4.5	5.6	7.1
450	18	11,890	4.3	5.0	6.3	7.9
500	20	11,890	4.5	5.5	7.0	8.8
600	24	11,890	5.2	6.6	8.3	10.6
650	26	11,890	5.7	7.2	9.0	11.4
700	28	11,890	6.1	7.7	9.7	12.3
750	30	11,890	6.5	8.3	10.4	13.2
800	32	11,890	6.9	8.8	11.1	14.1
900	36	11,890	7.8	9.9	12.5	15.8
1,000	40	11,890	8.7	11.0	13.9	17.6
1,050	42	11,890	9.1	11.6	14.6	18.5

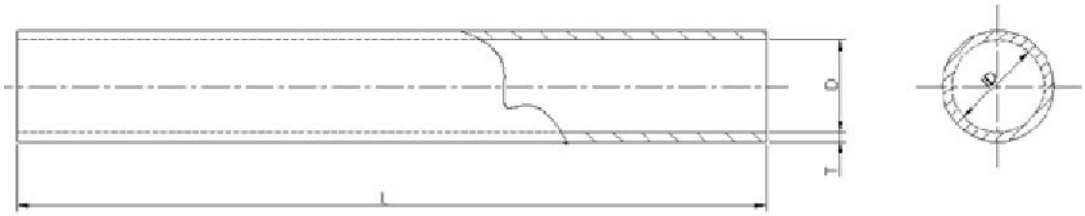

Dimension Table

STIFFNESS: SN1250 - SN10000 N/m2

Nominal Dia		L	Nominal wall thickness, T SN1250	Nominal wall thickness, T SN2500	Nominal wall thickness, T SN5000	Nominal wall thickness, T SN10000
mm	inch					
1,100	44	11,890	9.5	12.1	15.3	19.3
1,200	48	11,890	10.4	13.2	16.6	21.1
1,300	52	11,890	11.3	14.3	18.0	22.8
1,350	54	11,890	11.7	14.9	18.7	23.7
1,400	56	11,890	12.1	15.4	19.4	24.6
1,500	60	11,890	13.0	16.5	20.8	26.3
1,600	64	11,890	13.8	17.6	22.2	28.1
1,700	68	11,890	14.7	18.7	23.5	29.9
1,800	72	11,890	15.6	19.8	24.9	31.6
1,900	76	11,890	16.4	20.9	26.3	33.4
2,000	80	11,890	17.3	22.0	27.7	35.1
2,100	84	11,890	18.1	23.1	29.1	36.9
2,200	88	11,890	19.0	24.2	30.5	38.6
2,300	92	11,890	19.9	25.3	31.8	40.4
2,400	96	11,890	20.7	26.4	33.2	42.1
2,500	100	11,890	21.6	27.5	34.6	43.9
2,600	104	5,850	22.5	28.6	36.0	45.6
2,700	108	5,850	23.3	29.7	37.4	47.4
2,800	112	5,850	24.2	30.8	38.7	49.1
2,900	116	5,850	25.0	31.9	40.1	50.9
3,000	120	5,850	25.9	33.0	41.5	52.6

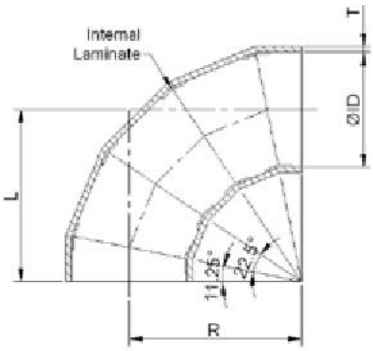

MITERED TYPE
Diameter from 650 mm

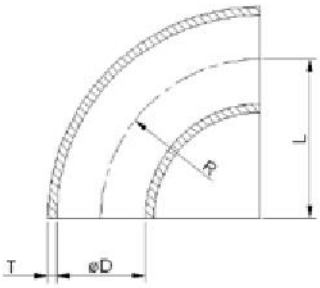

RADIUS TYPE
Diameter up to 600 mm

Dimension Table

Design Pressure: 3 Barg – 10Barg

ID		ELBOW 90°									
		R	L	Wall Thickness, T PN 3	Wall Thickness, T PN 4	Wall Thickness, T PN 5	Wall Thickness, T PN 6	Wall Thickness, T PN 7	Wall Thickness, T PN 8	Wall Thickness, T PN 9	Wall Thickness, T PN 10
mm	inch	mm	mm	mm	mm	mm	mm	mm	mm	mm	mm
15	1/2	23	23	6.5	6.5	6.5	6.5	6.5	6.5	6.5	6.5
20	3/4	30	30	6.5	6.5	6.5	6.5	6.5	6.5	6.5	6.5
25	1	38	38	6.5	6.5	6.5	6.5	6.5	6.5	6.5	6.5
32	1 1/4	48	48	6.5	6.5	6.5	6.5	6.5	6.5	6.5	6.5
40	1 1/2	60	60	6.5	6.5	6.5	6.5	6.5	6.5	6.5	6.5
50	2	75	75	6.5	6.5	6.5	6.5	6.5	6.5	6.5	6.5
65	2 1/2	98	98	6.5	6.5	6.5	6.5	6.5	6.5	6.5	6.5
80	3	120	120	6.5	6.5	6.5	6.5	6.5	6.5	6.5	6.5
100	4	150	150	6.5	6.5	6.5	6.5	6.5	6.5	6.5	6.5
125	5	188	188	6.5	6.5	6.5	6.5	6.5	6.5	6.5	6.8
150	6	225	225	6.5	6.5	6.5	6.5	6.5	6.6	7.1	7.5
200	8	300	300	6.5	6.5	6.5	6.6	7.2	7.7	8.3	8.7
250	10	375	375	6.5	6.5	6.8	7.5	8.1	8.7	9.5	10.1
300	12	450	450	6.5	6.6	7.5	8.3	9.0	9.8	10.7	11.4
350	14	525	525	6.5	7.2	8.1	9.0	9.9	10.8	11.7	12.8
400	16	600	600	6.6	7.7	8.7	9.8	10.8	11.9	12.9	14.0
450	18	675	675	7.1	8.3	9.5	10.5	11.7	12.9	14.1	15.3
500	20	750	750	7.4	8.7	10.1	11.4	12.6	14.0	15.3	16.7
600	24	900	900	8.3	9.8	11.4	12.9	14.6	16.1	17.7	19.2
650	26	975	975	8.6	10.4	12.0	13.7	15.5	17.1	18.9	20.6
700	28	1,050	1,050	9.0	10.8	12.6	14.4	16.4	18.2	20.0	21.9
750	30	1,125	1,125	9.3	11.3	13.4	15.3	17.3	19.2	21.2	23.3
800	32	1,200	1,200	9.8	11.9	14.0	16.1	18.2	20.3	22.4	24.5
900	36	1,350	1,350	10.5	12.9	15.3	17.6	20.0	22.4	24.8	27.2
1,000	40	1,500	1,500	11.3	14.0	16.5	19.2	21.8	24.5	27.2	29.7

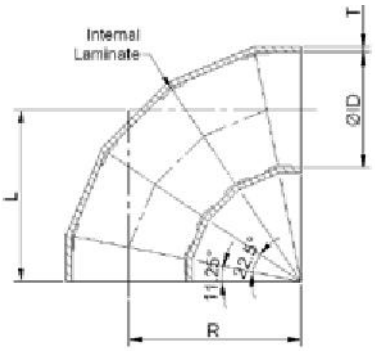

MITERED TYPE
Diameter from 650 mm

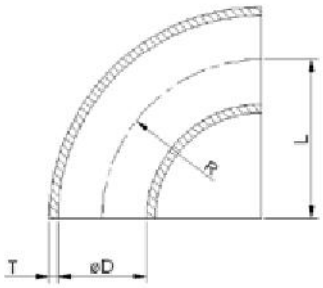

RADIUS TYPE
Diameter up to 600 mm

Dimension Table

Design Pressure: 3 Barg – 10Barg

ID		ELBOW 90°									
		R	L	Wall Thickness, T PN 3	Wall Thickness, T PN 4	Wall Thickness, T PN 5	Wall Thickness, T PN 6	Wall Thickness, T PN 7	Wall Thickness, T PN 8	Wall Thickness, T PN 9	Wall Thickness, T PN 10
mm	inch	mm	mm	mm	mm	mm	mm	mm	mm	mm	mm
1,050	42	1,575	1,575	11.7	14.4	17.3	20.0	22.7	25.5	28.2	31.1
1,100	44	1,650	1,650	12.2	15.0	17.9	20.7	23.6	26.6	29.4	32.4
1,200	48	1,800	1,800	12.9	16.1	19.2	22.4	25.5	28.7	31.8	35.0
1,300	52	1,950	1,950	13.7	17.1	20.4	23.9	27.3	30.8	34.2	37.7
1,350	54	2,025	2,025	14.1	17.6	21.2	24.6	28.2	31.8	35.4	38.9
1,400	56	2,100	2,100	14.4	18.2	21.8	25.4	29.1	32.9	36.5	40.2
1,500	60	2,250	2,250	15.2	19.1	23.1	27.0	30.9	35.0	38.9	42.9
1,600	64	2,400	2,400	16.1	20.1	24.3	28.5	32.7	37.1	41.3	45.5
1,700	68	2,550	2,550	16.8	21.2	25.7	30.2	34.7	39.0	43.7	48.2
1,800	72	2,700	2,700	17.6	22.2	27.0	31.7	36.5	41.1	45.9	50.7
1,900	76	2,850	2,850	18.3	23.3	28.2	33.3	38.3	43.2	48.3	53.4
2,000	80	3,000	3,000	19.1	24.3	29.6	34.8	40.1	45.3	50.7	56.0
2,100	84	3,150	3,150	19.8	25.4	30.9	36.3	41.9	47.4	53.0	58.7
2,200	88	3,300	3,300	20.7	26.4	32.1	38.0	43.7	49.5	55.4	61.2
2,300	92	3,450	3,450	21.5	27.5	33.5	39.5	45.6	51.6	57.8	63.9
2,400	96	3,600	3,600	22.2	28.5	34.8	41.1	47.4	53.7	60.0	66.5
2,500	100	3,750	3,750	23.0	29.6	36.0	42.6	49.2	55.8	62.4	69.0
2,600	104	3,900	3,900	23.7	30.6	37.4	44.3	51.0	57.9	64.8	71.7
2,700	108	4,050	4,050	24.6	31.7	38.7	45.8	52.8	60.0	67.2	74.3
2,800	112	4,200	4,200	25.4	32.7	39.9	47.3	54.8	62.1	69.5	77.0
2,900	116	4,350	4,350	26.1	33.6	41.3	48.9	56.6	64.2	71.9	79.5
3,000	120	4,500	4,500	26.9	34.7	42.6	50.4	58.4	66.3	74.3	82.2

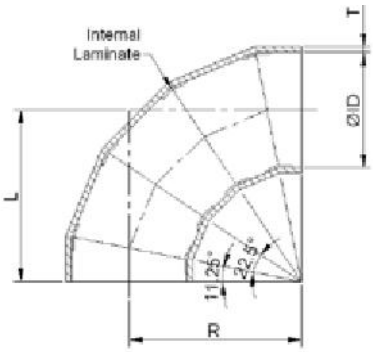

MITERED TYPE
Diameter from 650 mm

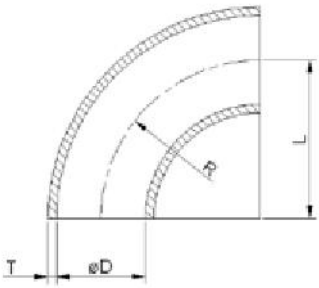

RADIUS TYPE
Diameter up to 600 mm

Dimension Table

Design Pressure: 11 Barg – 20Barg

ID		ELBOW 90°											
		R	L	Wall Thickness, T PN 11	Wall Thickness, T PN 12	Wall Thickness, T PN 13	Wall Thickness, T PN 14	Wall Thickness, T PN 15	Wall Thickness, T PN 16	Wall Thickness, T PN 17	Wall Thickness, T PN 18	Wall Thickness, T PN 19	Wall Thickness, T PN 20
mm	inch	mm	mm	mm	mm	mm	mm	mm	mm	mm	mm	mm	mm
15	1/2	23	23	6.5	6.5	6.5	6.5	6.5	6.5	6.5	6.5	6.5	6.5
20	3/4	30	30	6.5	6.5	6.5	6.5	6.5	6.5	6.5	6.5	6.5	6.5
25	1	38	38	6.5	6.5	6.5	6.5	6.5	6.5	6.5	6.5	6.5	6.5
32	1 1/4	48	48	6.5	6.5	6.5	6.5	6.5	6.5	6.5	6.5	6.5	6.5
40	1 1/2	60	60	6.5	6.5	6.5	6.5	6.5	6.5	6.5	6.5	6.5	6.5
50	2	75	75	6.5	6.5	6.5	6.5	6.5	6.5	6.5	6.5	6.5	6.5
65	2 1/2	98	98	6.5	6.5	6.5	6.5	6.5	6.5	6.5	6.5	6.8	6.9
80	3	120	120	6.5	6.5	6.5	6.5	6.5	6.8	6.9	7.1	7.4	7.5
100	4	150	150	6.5	6.8	6.9	7.2	7.5	7.8	8.1	8.3	8.6	8.9
125	5	188	188	7.2	7.5	7.8	8.1	8.6	8.9	9.2	9.5	9.9	10.2
150	6	225	225	7.8	8.3	8.7	9.0	9.5	9.9	10.4	10.7	11.1	11.6
200	8	300	300	9.3	9.9	10.4	11.0	11.4	12.0	12.6	13.1	13.7	14.1
250	10	375	375	10.8	11.4	12.2	12.8	13.5	14.1	14.9	15.5	16.2	16.8
300	12	450	450	12.2	13.1	13.8	14.6	15.5	16.2	17.1	17.9	18.6	19.5
350	14	525	525	13.7	14.6	15.5	16.5	17.4	18.3	19.4	20.3	21.2	22.2
400	16	600	600	15.2	16.2	17.3	18.3	19.4	20.4	21.6	22.7	23.7	24.8
450	18	675	675	16.5	17.7	18.9	20.1	21.3	22.5	23.9	25.1	26.3	27.5
500	20	750	750	18.0	19.4	20.7	22.1	23.4	24.8	26.1	27.5	28.8	30.2
600	24	900	900	20.9	22.5	24.0	25.7	27.3	29.0	30.6	32.3	33.8	35.4
650	26	975	975	22.4	24.0	25.8	27.6	29.3	31.1	32.9	34.5	36.3	38.1
700	28	1,050	1,050	23.7	25.7	27.5	29.4	31.2	33.2	35.1	36.9	38.9	40.8
750	30	1,125	1,125	25.2	27.2	29.3	31.2	33.3	35.3	37.4	39.3	41.4	43.5
800	32	1,200	1,200	26.7	28.8	30.9	33.0	35.3	37.4	39.6	41.7	44.0	46.1
900	36	1,350	1,350	29.6	32.0	34.4	36.8	39.2	41.6	44.1	46.5	48.9	51.5
1,000	40	1,500	1,500	32.4	35.1	37.8	40.5	43.2	45.9	48.6	51.3	54.0	56.7

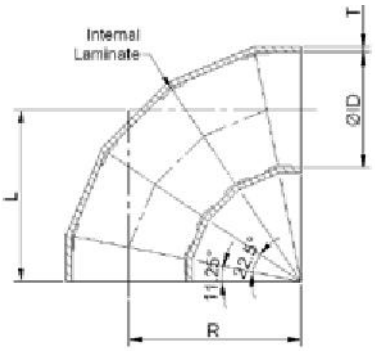

MITERED TYPE
Diameter from 650 mm

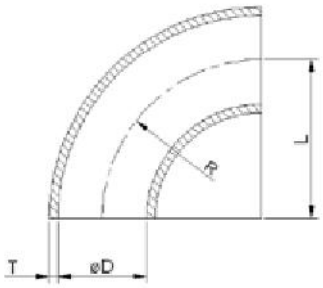

RADIUS TYPE
Diameter up to 600 mm

Dimension Table

Design Pressure: 11 Barg – 20Barg

ID		ELBOW 90°											
		R	L	Wall Thickness, T PN 11	Wall Thickness, T PN 12	Wall Thickness, T PN 13	Wall Thickness, T PN 14	Wall Thickness, T PN 15	Wall Thickness, T PN 16	Wall Thickness, T PN 17	Wall Thickness, T PN 18	Wall Thickness, T PN 19	Wall Thickness, T PN 20
mm	inch	mm	mm	mm	mm	mm	mm	mm	mm	mm	mm	mm	mm
1,050	42	1,575	1,575	33.9	36.6	39.5	42.3	45.2	48.0	50.9	53.7	56.6	59.4
1,100	44	1,650	1,650	35.3	38.3	41.3	44.1	47.1	50.1	53.1	56.1	59.1	62.1
1,200	48	1,800	1,800	38.3	41.4	44.6	47.9	51.0	54.3	57.6	60.9	64.1	67.4
1,300	52	1,950	1,950	41.1	44.6	48.0	51.6	55.1	58.5	62.1	65.6	69.2	72.8
1,350	54	2,025	2,025	42.5	46.2	49.8	53.4	57.0	60.6	64.4	68.0	71.7	75.5
1,400	56	2,100	2,100	44.0	47.7	51.5	55.2	59.0	62.9	66.6	70.4	74.3	78.0
1,500	60	2,250	2,250	46.8	50.9	54.9	59.0	63.0	67.1	71.1	75.2	79.2	83.4
1,600	64	2,400	2,400	49.8	54.0	58.4	62.6	66.9	71.3	75.6	80.0	84.3	88.7
1,700	68	2,550	2,550	52.7	57.2	61.8	66.3	71.0	75.5	80.1	84.8	89.4	94.1
1,800	72	2,700	2,700	55.5	60.3	65.1	70.1	74.9	79.7	84.6	89.6	94.4	99.3
1,900	76	2,850	2,850	58.4	63.5	68.6	73.7	78.8	84.0	89.1	94.4	99.5	104.7
2,000	80	3,000	3,000	61.4	66.6	72.0	77.4	82.8	88.2	93.6	99.0	104.6	110.0
2,100	84	3,150	3,150	64.2	69.8	75.5	81.0	86.7	92.4	98.1	103.8	109.5	115.4
2,200	88	3,300	3,300	67.1	72.9	78.9	84.8	90.8	96.6	102.6	108.6	114.6	120.6
2,300	92	3,450	3,450	69.9	76.1	82.2	88.5	94.7	101.0	107.1	113.4	119.7	126.0
2,400	96	3,600	3,600	72.9	79.2	85.7	92.1	98.6	105.2	111.6	118.2	124.7	131.3
2,500	100	3,750	3,750	75.8	82.4	89.1	95.9	102.6	109.4	116.1	123.0	129.8	136.7
2,600	104	3,900	3,900	78.6	85.5	92.6	99.6	106.5	113.6	120.6	127.7	134.9	141.9
2,700	108	4,050	4,050	81.5	88.8	96.0	103.2	110.6	117.8	125.1	132.5	139.8	147.3
2,800	112	4,200	4,200	84.5	92.0	99.5	107.0	114.5	122.1	129.6	137.3	144.9	152.6
2,900	116	4,350	4,350	87.3	95.1	102.8	110.6	118.5	126.3	134.1	142.1	150.0	158.0
3,000	120	4,500	4,500	90.2	98.3	106.2	114.3	122.4	130.5	138.6	146.9	155.0	163.2

Dimension Table

Design Pressure: 3 Barg – 10 Barg

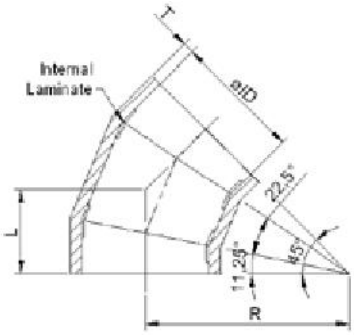

MITERED TYPE
Diameter 650 mm and above

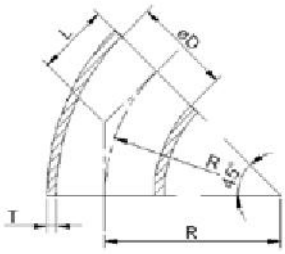

RADIUS TYPE
Diameter up to 600 mm

ID		ELBOW 45°									
		R	L	Wall Thickness, T PN 3	Wall Thickness, T PN 4	Wall Thickness, T PN 5	Wall Thickness, T PN 6	Wall Thickness, T PN 7	Wall Thickness, T PN 8	Wall Thickness, T PN 9	Wall Thickness, T PN 10
mm	inch	mm	mm	mm	mm	mm	mm	mm	mm	mm	mm
15	1/2	23	9	6.5	6.5	6.5	6.5	6.5	6.5	6.5	6.5
20	3/4	30	12	6.5	6.5	6.5	6.5	6.5	6.5	6.5	6.5
25	1	38	16	6.5	6.5	6.5	6.5	6.5	6.5	6.5	6.5
32	1 1/4	48	20	6.5	6.5	6.5	6.5	6.5	6.5	6.5	6.5
40	1 1/2	60	25	6.5	6.5	6.5	6.5	6.5	6.5	6.5	6.5
50	2	75	31	6.5	6.5	6.5	6.5	6.5	6.5	6.5	6.5
65	2 1/2	98	40	6.5	6.5	6.5	6.5	6.5	6.5	6.5	6.5
80	3	120	50	6.5	6.5	6.5	6.5	6.5	6.5	6.5	6.5
100	4	150	62	6.5	6.5	6.5	6.5	6.5	6.5	6.5	6.5
125	5	188	78	6.5	6.5	6.5	6.5	6.5	6.5	6.5	6.8
150	6	225	93	6.5	6.5	6.5	6.5	6.5	6.6	7.1	7.5
200	8	300	124	6.5	6.5	6.5	6.6	7.2	7.7	8.3	8.7
250	10	375	155	6.5	6.5	6.8	7.5	8.1	8.7	9.5	10.1
300	12	450	186	6.5	6.6	7.5	8.3	9.0	9.8	10.7	11.4
350	14	525	217	6.5	7.2	8.1	9.0	9.9	10.8	11.7	12.8
400	16	600	249	6.6	7.7	8.7	9.8	10.8	11.9	12.9	14.0
450	18	675	280	7.1	8.3	9.5	10.5	11.7	12.9	14.1	15.3
500	20	750	311	7.4	8.7	10.1	11.4	12.6	14.0	15.3	16.7
600	24	900	373	8.3	9.8	11.4	12.9	14.6	16.1	17.7	19.2
650	26	975	404	8.6	10.4	12.0	13.7	15.5	17.1	18.9	20.6
700	28	1,050	435	9.0	10.8	12.6	14.4	16.4	18.2	20.0	21.9
750	30	1,125	466	9.3	11.3	13.4	15.3	17.3	19.2	21.2	23.3
800	32	1,200	497	9.8	11.9	14.0	16.1	18.2	20.3	22.4	24.5
900	36	1,350	559	10.5	12.9	15.3	17.6	20.0	22.4	24.8	27.2
1,000	40	1,500	621	11.3	14.0	16.5	19.2	21.8	24.5	27.2	29.7

Dimension Table

Design Pressure: 3 Barg – 10 Barg

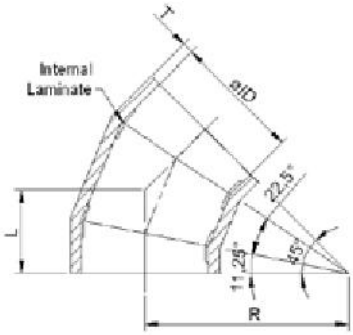

MITERED TYPE
Diameter 650 mm and above

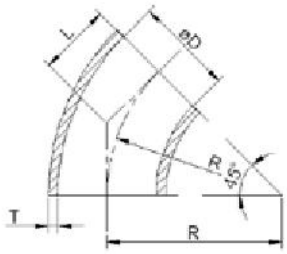

RADIUS TYPE
Diameter up to 600 mm

ID		ELBOW 45°									
		R	L	Wall Thickness, T PN 3	Wall Thickness, T PN 4	Wall Thickness, T PN 5	Wall Thickness, T PN 6	Wall Thickness, T PN 7	Wall Thickness, T PN 8	Wall Thickness, T PN 9	Wall Thickness, T PN 10
mm	inch	mm	mm	mm	mm	mm	mm	mm	mm	mm	mm
1,050	42	1,575	652	11.7	14.4	17.3	20.0	22.7	25.5	28.2	31.1
1,100	44	1,650	683	12.2	15.0	17.9	20.7	23.6	26.6	29.4	32.4
1,200	48	1,800	746	12.9	16.1	19.2	22.4	25.5	28.7	31.8	35.0
1,300	52	1,950	808	13.7	17.1	20.4	23.9	27.3	30.8	34.2	37.7
1,350	54	2,025	839	14.1	17.6	21.2	24.6	28.2	31.8	35.4	38.9
1,400	56	2,100	870	14.4	18.2	21.8	25.4	29.1	32.9	36.5	40.2
1,500	60	2,250	932	15.2	19.1	23.1	27.0	30.9	35.0	38.9	42.9
1,600	64	2,400	994	16.1	20.1	24.3	28.5	32.7	37.1	41.3	45.5
1,700	68	2,550	1,056	16.8	21.2	25.7	30.2	34.7	39.0	43.7	48.2
1,800	72	2,700	1,118	17.6	22.2	27.0	31.7	36.5	41.1	45.9	50.7
1,900	76	2,850	1,181	18.3	23.3	28.2	33.3	38.3	43.2	48.3	53.4
2,000	80	3,000	1,243	19.1	24.3	29.6	34.8	40.1	45.3	50.7	56.0
2,100	84	3,150	1,305	19.8	25.4	30.9	36.3	41.9	47.4	53.0	58.7
2,200	88	3,300	1,367	20.7	26.4	32.1	38.0	43.7	49.5	55.4	61.2
2,300	92	3,450	1,429	21.5	27.5	33.5	39.5	45.6	51.6	57.8	63.9
2,400	96	3,600	1,491	22.2	28.5	34.8	41.1	47.4	53.7	60.0	66.5
2,500	100	3,750	1,553	23.0	29.6	36.0	42.6	49.2	55.8	62.4	69.0
2,600	104	3,900	1,615	23.7	30.6	37.4	44.3	51.0	57.9	64.8	71.7
2,700	108	4,050	1,678	24.6	31.7	38.7	45.8	52.8	60.0	67.2	74.3
2,800	112	4,200	1,740	25.4	32.7	39.9	47.3	54.8	62.1	69.5	77.0
2,900	116	4,350	1,802	26.1	33.6	41.3	48.9	56.6	64.2	71.9	79.5
3,000	120	4,500	1,864	26.9	34.7	42.6	50.4	58.4	66.3	74.3	82.2

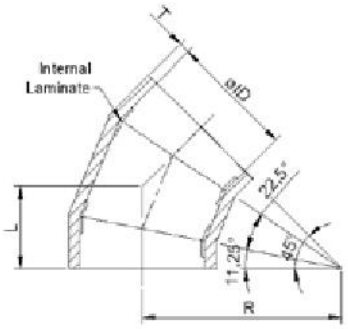

MITERED TYPE
Diameter 650 mm and above

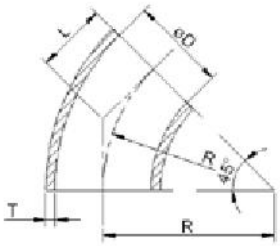

RADIUS TYPE
Diameter up to 600 mm

Dimension Table

Design Pressure: 11 Barg – 20 Barg

ID		ELBOW 45°											
		R	L	Wall Thickness, T PN 11	Wall Thickness, T PN 12	Wall Thickness, T PN 13	Wall Thickness, T PN 14	Wall Thickness, T PN 15	Wall Thickness, T PN 16	Wall Thickness, T PN 17	Wall Thickness, T PN 18	Wall Thickness, T PN 19	Wall Thickness, T PN 20
mm	inch	mm	mm	mm	mm	mm	mm	mm	mm	mm	mm	mm	mm
15	1/2	23	9	6.5	6.5	6.5	6.5	6.5	6.5	6.5	6.5	6.5	6.5
20	3/4	30	12	6.5	6.5	6.5	6.5	6.5	6.5	6.5	6.5	6.5	6.5
25	1	38	16	6.5	6.5	6.5	6.5	6.5	6.5	6.5	6.5	6.5	6.5
32	1 1/4	48	20	6.5	6.5	6.5	6.5	6.5	6.5	6.5	6.5	6.5	6.5
40	1 1/2	60	25	6.5	6.5	6.5	6.5	6.5	6.5	6.5	6.5	6.5	6.5
50	2	75	31	6.5	6.5	6.5	6.5	6.5	6.5	6.5	6.5	6.5	6.5
65	2 1/2	98	40	6.5	6.5	6.5	6.5	6.5	6.5	6.5	6.5	6.8	6.9
80	3	120	50	6.5	6.5	6.5	6.5	6.5	6.8	6.9	7.1	7.4	7.5
100	4	150	62	6.5	6.8	6.9	7.2	7.5	7.8	8.1	8.3	8.6	8.9
125	5	188	78	7.2	7.5	7.8	8.1	8.6	8.9	9.2	9.5	9.9	10.2
150	6	225	93	7.8	8.3	8.7	9.0	9.5	9.9	10.4	10.7	11.1	11.6
200	8	300	124	9.3	9.9	10.4	11.0	11.4	12.0	12.6	13.1	13.7	14.1
250	10	375	155	10.8	11.4	12.2	12.8	13.5	14.1	14.9	15.5	16.2	16.8
300	12	450	186	12.2	13.1	13.8	14.6	15.5	16.2	17.1	17.9	18.6	19.5
350	14	525	217	13.7	14.6	15.5	16.5	17.4	18.3	19.4	20.3	21.2	22.2
400	16	600	249	15.2	16.2	17.3	18.3	19.4	20.4	21.6	22.7	23.7	24.8
450	18	675	280	16.5	17.7	18.9	20.1	21.3	22.5	23.9	25.1	26.3	27.5
500	20	750	311	18.0	19.4	20.7	22.1	23.4	24.8	26.1	27.5	28.8	30.2
600	24	900	373	20.9	22.5	24.0	25.7	27.3	29.0	30.6	32.3	33.8	35.4
650	26	975	404	22.4	24.0	25.8	27.6	29.3	31.1	32.9	34.5	36.3	38.1
700	28	1,050	435	23.7	25.7	27.5	29.4	31.2	33.2	35.1	36.9	38.9	40.8
750	30	1,125	466	25.2	27.2	29.3	31.2	33.3	35.3	37.4	39.3	41.4	43.5
800	32	1,200	497	26.7	28.8	30.9	33.0	35.3	37.4	39.6	41.7	44.0	46.1
900	36	1,350	559	29.6	32.0	34.4	36.8	39.2	41.6	44.1	46.5	48.9	51.5
1,000	40	1,500	621	32.4	35.1	37.8	40.5	43.2	45.9	48.6	51.3	54.0	56.7

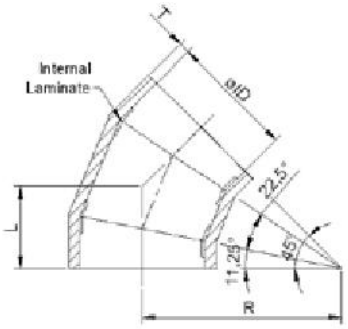

MITERED TYPE
Diameter 650 mm and above

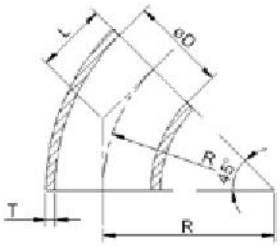

RADIUS TYPE
Diameter up to 600 mm

Dimension Table

Design Pressure: 11 Barg – 20 Barg

ID		ELBOW 45°											
		R	L	Wall Thickness, T PN 11	Wall Thickness, T PN 12	Wall Thickness, T PN 13	Wall Thickness, T PN 14	Wall Thickness, T PN 15	Wall Thickness, T PN 16	Wall Thickness, T PN 17	Wall Thickness, T PN 18	Wall Thickness, T PN 19	Wall Thickness, T PN 20
mm	inch	mm	mm	mm	mm	mm	mm	mm	mm	mm	mm	mm	mm
1,050	42	1,575	652	33.9	36.6	39.5	42.3	45.2	48.0	50.9	53.7	56.6	59.4
1,100	44	1,650	683	35.3	38.3	41.3	44.1	47.1	50.1	53.1	56.1	59.1	62.1
1,200	48	1,800	746	38.3	41.4	44.6	47.9	51.0	54.3	57.6	60.9	64.1	67.4
1,300	52	1,950	808	41.1	44.6	48.0	51.6	55.1	58.5	62.1	65.6	69.2	72.8
1,350	54	2,025	839	42.5	46.2	49.8	53.4	57.0	60.6	64.4	68.0	71.7	75.5
1,400	56	2,100	870	44.0	47.7	51.5	55.2	59.0	62.9	66.6	70.4	74.3	78.0
1,500	60	2,250	932	46.8	50.9	54.9	59.0	63.0	67.1	71.1	75.2	79.2	83.4
1,600	64	2,400	994	49.8	54.0	58.4	62.6	66.9	71.3	75.6	80.0	84.3	88.7
1,700	68	2,550	1,056	52.7	57.2	61.8	66.3	71.0	75.5	80.1	84.8	89.4	94.1
1,800	72	2,700	1,118	55.5	60.3	65.1	70.1	74.9	79.7	84.6	89.6	94.4	99.3
1,900	76	2,850	1,181	58.4	63.5	68.6	73.7	78.8	84.0	89.1	94.4	99.5	104.7
2,000	80	3,000	1,243	61.4	66.6	72.0	77.4	82.8	88.2	93.6	99.0	104.6	110.0
2,100	84	3,150	1,305	64.2	69.8	75.5	81.0	86.7	92.4	98.1	103.8	109.5	115.4
2,200	88	3,300	1,367	67.1	72.9	78.9	84.8	90.8	96.6	102.6	108.6	114.6	120.6
2,300	92	3,450	1,429	69.9	76.1	82.2	88.5	94.7	101.0	107.1	113.4	119.7	126.0
2,400	96	3,600	1,491	72.9	79.2	85.7	92.1	98.6	105.2	111.6	118.2	124.7	131.3
2,500	100	3,750	1,553	75.8	82.4	89.1	95.9	102.6	109.4	116.1	123.0	129.8	136.7
2,600	104	3,900	1,615	78.6	85.5	92.6	99.6	106.5	113.6	120.6	127.7	134.9	141.9
2,700	108	4,050	1,678	81.5	88.8	96.0	103.2	110.6	117.8	125.1	132.5	139.8	147.3
2,800	112	4,200	1,740	84.5	92.0	99.5	107.0	114.5	122.1	129.6	137.3	144.9	152.6
2,900	116	4,350	1,802	87.3	95.1	102.8	110.6	118.5	126.3	134.1	142.1	150.0	158.0
3,000	120	4,500	1,864	90.2	98.3	106.2	114.3	122.4	130.5	138.6	146.9	155.0	163.2

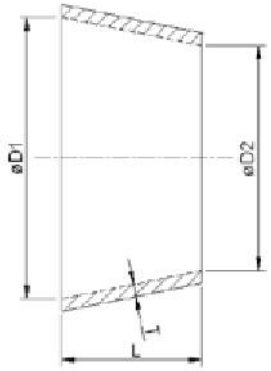

Dimension Table

Design Pressure: 3 Barg – 10 Barg

Nominal Diameter				L	Wall Thickness, t PN 3	Wall Thickness, t PN 4	Wall Thickness, t PN 5	Wall Thickness, t PN 6	Wall Thickness, t PN 7	Wall Thickness, t PN 8	Wall Thickness, t PN 9	Wall Thickness, t PN 10
(mm)		(inch)										
øD1	øD2	øD1	øD2	(mm)	(mm)	(mm)	(mm)	(mm)	(mm)	(mm)	(mm)	(mm)
40	20	1 1/2	3/4	50	6.5	6.5	6.5	6.5	6.5	6.5	6.5	6.5
40	25	1 1/2	1	38	6.5	6.5	6.5	6.5	6.5	6.5	6.5	6.5
50	25	2	1	63	6.5	6.5	6.5	6.5	6.5	6.5	6.5	6.5
50	40	2	3/4	25	6.5	6.5	6.5	6.5	6.5	6.5	6.5	6.5
65	40	2.6	1 1/2	63	6.5	6.5	6.5	6.5	6.5	6.5	6.5	6.5
65	50	2.6	2	38	6.5	6.5	6.5	6.5	6.5	6.5	6.5	6.5
80	40	3.2	1 1/2	100	6.5	6.5	6.5	6.5	6.5	6.5	6.5	6.5
80	50	3.2	2	75	6.5	6.5	6.5	6.5	6.5	6.5	6.5	6.5
80	65	3.2	2 1/2	38	6.5	6.5	6.5	6.5	6.5	6.5	6.5	6.5
100	40	4	1 1/2	150	6.5	6.5	6.5	6.5	6.5	6.5	6.5	6.5
100	50	4	2	125	6.5	6.5	6.5	6.5	6.5	6.5	6.5	6.5
100	65	4	2 1/2	88	6.5	6.5	6.5	6.5	6.5	6.5	6.5	6.5
100	80	4	3	50	6.5	6.5	6.5	6.5	6.5	6.5	6.5	6.5
125	50	5	2	188	6.5	6.5	6.5	6.5	6.5	6.5	6.5	6.8
125	65	5	2 1/2	150	6.5	6.5	6.5	6.5	6.5	6.5	6.5	6.8
125	80	5	3	113	6.5	6.5	6.5	6.5	6.5	6.5	6.5	6.8
125	100	5	4	63	6.5	6.5	6.5	6.5	6.5	6.5	6.5	6.8
150	50	6	2	250	6.5	6.5	6.5	6.5	6.5	6.6	7.1	7.5
150	65	6	2 1/2	213	6.5	6.5	6.5	6.5	6.5	6.6	7.1	7.5
150	80	6	3	175	6.5	6.5	6.5	6.5	6.5	6.6	7.1	7.5
150	100	6	4	125	6.5	6.5	6.5	6.5	6.5	6.6	7.1	7.5
150	125	6	5	63	6.5	6.5	6.5	6.5	6.5	6.6	7.1	7.5
200	50	8	2	375	6.5	6.5	6.5	6.6	7.2	7.7	8.3	8.7
200	65	8	2 1/2	338	6.5	6.5	6.5	6.6	7.2	7.7	8.3	8.7
200	80	8	3	300	6.5	6.5	6.5	6.6	7.2	7.7	8.3	8.7

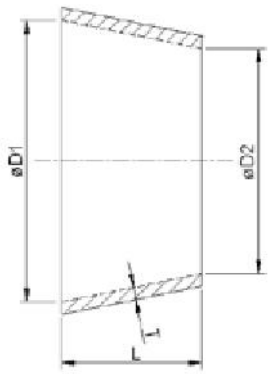

Dimension Table

Design Pressure: 3 Barg – 10 Barg

Nominal Diameter				L	Wall Thickness, T PN 3	Wall Thickness, T PN 4	Wall Thickness, T PN 5	Wall Thickness, T PN 6	Wall Thickness, T PN 7	Wall Thickness, T PN 8	Wall Thickness, T PN 9	Wall Thickness, T PN 10
(mm)		(inch)										
øD1	øD2	øD1	øD2	(mm)	(mm)	(mm)	(mm)	(mm)	(mm)	(mm)	(mm)	(mm)
200	100	8	4	250	6.5	6.5	6.5	6.6	7.2	7.7	8.3	8.7
200	125	8	5	188	6.5	6.5	6.5	6.6	7.2	7.7	8.3	8.7
200	150	8	6	125	6.5	6.5	6.5	6.6	7.2	7.7	8.3	8.7
250	80	10	3	425	6.5	6.5	6.8	7.5	8.1	8.7	9.5	10.1
250	100	10	4	375	6.5	6.5	6.8	7.5	8.1	8.7	9.5	10.1
250	125	10	5	313	6.5	6.5	6.8	7.5	8.1	8.7	9.5	10.1
250	150	10	6	250	6.5	6.5	6.8	7.5	8.1	8.7	9.5	10.1
250	200	10	8	125	6.5	6.5	6.8	7.5	8.1	8.7	9.5	10.1
300	100	12	4	500	6.5	6.6	7.5	8.3	9.0	9.8	10.7	11.4
300	125	12	5	438	6.5	6.6	7.5	8.3	9.0	9.8	10.7	11.4
300	150	12	6	375	6.5	6.6	7.5	8.3	9.0	9.8	10.7	11.4
300	200	12	8	250	6.5	6.6	7.5	8.3	9.0	9.8	10.7	11.4
300	250	12	10	125	6.5	6.6	7.5	8.3	9.0	9.8	10.7	11.4
350	100	14	4	625	6.5	7.2	8.1	9.0	9.9	10.8	11.7	12.8
350	125	14	5	563	6.5	7.2	8.1	9.0	9.9	10.8	11.7	12.8
350	150	14	6	500	6.5	7.2	8.1	9.0	9.9	10.8	11.7	12.8
350	200	14	8	375	6.5	7.2	8.1	9.0	9.9	10.8	11.7	12.8
350	250	14	10	250	6.5	7.2	8.1	9.0	9.9	10.8	11.7	12.8
350	300	14	12	125	6.5	7.2	8.1	9.0	9.9	10.8	11.7	12.8
400	100	16	4	750	6.6	7.7	8.7	9.8	10.8	11.9	12.9	14.0
400	125	16	5	688	6.6	7.7	8.7	9.8	10.8	11.9	12.9	14.0
400	150	16	6	625	6.6	7.7	8.7	9.8	10.8	11.9	12.9	14.0
400	200	16	8	500	6.6	7.7	8.7	9.8	10.8	11.9	12.9	14.0
400	250	16	10	375	6.6	7.7	8.7	9.8	10.8	11.9	12.9	14.0
400	300	16	12	250	6.6	7.7	8.7	9.8	10.8	11.9	12.9	14.0

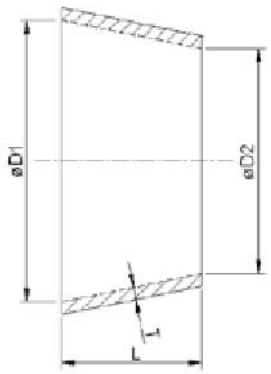

Dimension Table

Design Pressure: 3 Barg – 10 Barg

Nominal Diameter				L	Wall Thickness, t PN 3	Wall Thickness, t PN 4	Wall Thickness, t PN 5	Wall Thickness, t PN 6	Wall Thickness, t PN 7	Wall Thickness, t PN 8	Wall Thickness, t PN 9	Wall Thickness, t PN 10
(mm)		(inch)										
øD1	øD2	øD1	øD2	(mm)	(mm)	(mm)	(mm)	(mm)	(mm)	(mm)	(mm)	(mm)
400	350	16	14	125	6.6	7.7	8.7	9.8	10.8	11.9	12.9	14.0
450	100	18	4	875	7.1	8.3	9.5	10.5	11.7	12.9	14.1	15.3
450	125	18	5	813	7.1	8.3	9.5	10.5	11.7	12.9	14.1	15.3
450	150	18	6	750	7.1	8.3	9.5	10.5	11.7	12.9	14.1	15.3
450	200	18	8	625	7.1	8.3	9.5	10.5	11.7	12.9	14.1	15.3
450	250	18	10	500	7.1	8.3	9.5	10.5	11.7	12.9	14.1	15.3
450	300	18	12	375	7.1	8.3	9.5	10.5	11.7	12.9	14.1	15.3
450	350	18	14	250	7.1	8.3	9.5	10.5	11.7	12.9	14.1	15.3
500	125	20	5	938	7.4	8.7	10.1	11.4	12.6	14.0	15.3	16.7
500	150	20	6	875	7.4	8.7	10.1	11.4	12.6	14.0	15.3	16.7
500	200	20	8	750	7.4	8.7	10.1	11.4	12.6	14.0	15.3	16.7
500	250	20	10	625	7.4	8.7	10.1	11.4	12.6	14.0	15.3	16.7
500	300	20	12	500	7.4	8.7	10.1	11.4	12.6	14.0	15.3	16.7
500	350	20	14	375	7.4	8.7	10.1	11.4	12.6	14.0	15.3	16.7
500	400	20	16	250	7.4	8.7	10.1	11.4	12.6	14.0	15.3	16.7
500	450	20	18	125	7.4	8.7	10.1	11.4	12.6	14.0	15.3	16.7
600	150	24	6	1,125	8.3	9.8	11.4	12.9	14.6	16.1	17.7	19.2
600	200	24	8	1,000	8.3	9.8	11.4	12.9	14.6	16.1	17.7	19.2
600	250	24	10	875	8.3	9.8	11.4	12.9	14.6	16.1	17.7	19.2
600	300	24	12	750	8.3	9.8	11.4	12.9	14.6	16.1	17.7	19.2
600	400	24	16	500	8.3	9.8	11.4	12.9	14.6	16.1	17.7	19.2
600	450	24	18	375	8.3	9.8	11.4	12.9	14.6	16.1	17.7	19.2
600	500	24	20	250	8.3	9.8	11.4	12.9	14.6	16.1	17.7	19.2
650	200	26	8	1,125	8.6	10.4	12.0	13.7	15.5	17.1	18.9	20.6
650	250	26	10	1,000	8.6	10.4	12.0	13.7	15.5	17.1	18.9	20.6

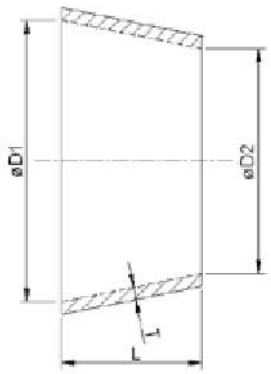

Dimension Table

Design Pressure: 3 Barg – 10 Barg

Nominal Diameter				L	Wall Thickness, t PN 3	Wall Thickness, t PN 4	Wall Thickness, t PN 5	Wall Thickness, t PN 6	Wall Thickness, t PN 7	Wall Thickness, t PN 8	Wall Thickness, t PN 9	Wall Thickness, t PN 10
(mm)		(inch)										
øD1	øD2	øD1	øD2	(mm)	(mm)	(mm)	(mm)	(mm	(mm)	(mm)	(mm)	(mm)
650	300	26	12	875	8.6	10.4	12.0	13.7	15.5	17.1	18.9	20.6
650	400	26	16	625	8.6	10.4	12.0	13.7	15.5	17.1	18.9	20.6
650	450	26	18	500	8.6	10.4	12.0	13.7	15.5	17.1	18.9	20.6
650	500	26	20	375	8.6	10.4	12.0	13.7	15.5	17.1	18.9	20.6
650	600	26	24	125	8.6	10.4	12.0	13.7	15.5	17.1	18.9	20.6
700	200	28	8	1250	9.0	10.8	12.6	14.4	16.4	18.2	20.0	21.9
700	250	28	10	1125	9.0	10.8	12.6	14.4	16.4	18.2	20.0	21.9
700	300	28	12	1000	9.0	10.8	12.6	14.4	16.4	18.2	20.0	21.9
700	350	28	14	875	9.0	10.8	12.6	14.4	16.4	18.2	20.0	21.9
700	400	28	16	750	9.0	10.8	12.6	14.4	16.4	18.2	20.0	21.9
700	450	28	18	625	9.0	10.8	12.6	14.4	16.4	18.2	20.0	21.9
700	500	28	20	500	9.0	10.8	12.6	14.4	16.4	18.2	20.0	21.9
700	600	28	24	250	9.0	10.8	12.6	14.4	16.4	18.2	20.0	21.9
750	250	30	10	1,250	9.3	11.3	13.4	15.3	17.3	19.2	21.2	23.3
750	300	30	12	1,125	9.3	11.3	13.4	15.3	17.3	19.2	21.2	23.3
750	350	30	14	1,000	9.3	11.3	13.4	15.3	17.3	19.2	21.2	23.3
750	400	30	16	875	9.3	11.3	13.4	15.3	17.3	19.2	21.2	23.3
750	450	30	18	750	9.3	11.3	13.4	15.3	17.3	19.2	21.2	23.3
750	500	30	20	625	9.3	11.3	13.4	15.3	17.3	19.2	21.2	23.3
750	600	30	24	375	9.3	11.3	13.4	15.3	17.3	19.2	21.2	23.3
750	700	30	28	125	9.3	11.3	13.4	15.3	17.3	19.2	21.2	23.3
800	250	32	10	1,375	9.8	11.9	14.0	16.1	18.2	20.3	22.4	24.5
800	300	32	12	1,250	9.8	11.9	14.0	16.1	18.2	20.3	22.4	24.5
800	350	32	14	1,125	9.8	11.9	14.0	16.1	18.2	20.3	22.4	24.5
800	400	32	16	1,000	9.8	11.9	14.0	16.1	18.2	20.3	22.4	24.5

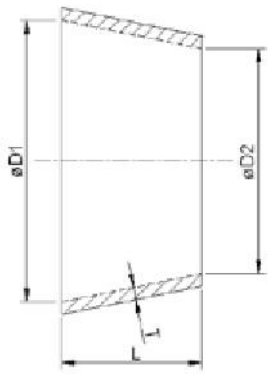

Dimension Table

Design Pressure: 3 Barg – 10 Barg

Nominal Diameter				L	Wall Thickness, T PN 3	Wall Thickness, T PN 4	Wall Thickness, T PN 5	Wall Thickness, T PN 6	Wall Thickness, T PN 7	Wall Thickness, T PN 8	Wall Thickness, T PN 9	Wall Thickness, T PN 10
(mm)		(inch)										
øD1	øD2	øD1	øD2	(mm)	(mm)	(mm)	(mm)	(mm)	(mm)	(mm)	(mm)	(mm)
800	450	32	18	875	9.8	11.9	14.0	16.1	18.2	20.3	22.4	24.5
800	500	32	20	750	9.8	11.9	14.0	16.1	18.2	20.3	22.4	24.5
800	600	32	24	500	9.8	11.9	14.0	16.1	18.2	20.3	22.4	24.5
800	700	32	28	250	9.8	11.9	14.0	16.1	18.2	20.3	22.4	24.5
900	300	36	12	1,500	10.5	12.9	15.3	17.6	20.0	22.4	24.8	27.2
900	350	36	14	1,375	10.5	12.9	15.3	17.6	20.0	22.4	24.8	27.2
900	400	36	16	1,250	10.5	12.9	15.3	17.6	20.0	22.4	24.8	27.2
900	450	36	18	1,125	10.5	12.9	15.3	17.6	20.0	22.4	24.8	27.2
900	500	36	20	1,000	10.5	12.9	15.3	17.6	20.0	22.4	24.8	27.2
900	600	36	24	750	10.5	12.9	15.3	17.6	20.0	22.4	24.8	27.2
900	700	36	28	500	10.5	12.9	15.3	17.6	20.0	22.4	24.8	27.2
900	800	36	32	250	10.5	12.9	15.3	17.6	20.0	22.4	24.8	27.2
1,000	350	40	14	1,625	11.3	14.0	16.5	19.2	21.8	24.5	27.2	29.7
1,000	400	40	16	1,500	11.3	14.0	16.5	19.2	21.8	24.5	27.2	29.7
1,000	450	40	18	1,375	11.3	14.0	16.5	19.2	21.8	24.5	27.2	29.7
1,000	500	40	20	1,250	11.3	14.0	16.5	19.2	21.8	24.5	27.2	29.7
1,000	600	40	24	1,000	11.3	14.0	16.5	19.2	21.8	24.5	27.2	29.7
1,000	700	40	28	750	11.3	14.0	16.5	19.2	21.8	24.5	27.2	29.7
1,000	800	40	32	500	11.3	14.0	16.5	19.2	21.8	24.5	27.2	29.7
1,000	900	40	36	250	11.3	14.0	16.5	19.2	21.8	24.5	27.2	29.7
1,050	400	42	16	1,625	11.7	14.4	17.3	20.0	22.7	25.5	28.2	31.1
1,050	450	42	18	1,500	11.7	14.4	17.3	20.0	22.7	25.5	28.2	31.1
1,050	500	42	20	1,375	11.7	14.4	17.3	20.0	22.7	25.5	28.2	31.1
1,050	600	42	24	1,125	11.7	14.4	17.3	20.0	22.7	25.5	28.2	31.1
1,050	700	42	28	875	11.7	14.4	17.3	20.0	22.7	25.5	28.2	31.1

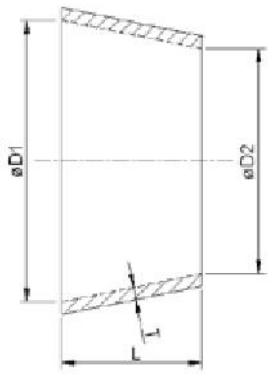

Dimension Table

Design Pressure: 3 Barg – 10 Barg

Nominal Diameter				L	Wall Thickness, t PN 3	Wall Thickness, t PN 4	Wall Thickness, t PN 5	Wall Thickness, t PN 6	Wall Thickness, t PN 7	Wall Thickness, t PN 8	Wall Thickness, t PN 9	Wall Thickness, t PN 10
(mm)		(inch)										
øD1	øD2	øD1	øD2	(mm)	(mm)	(mm)	(mm)	(mm)	(mm)	(mm)	(mm)	(mm)
1,050	800	42	32	625	11.7	14.4	17.3	20.0	22.7	25.5	28.2	31.1
1,050	900	42	36	375	11.7	14.4	17.3	20.0	22.7	25.5	28.2	31.1
1,050	1,000	42	40	125	11.7	14.4	17.3	20.0	22.7	25.5	28.2	31.1
1,100	400	44	16	1,750	12.2	15.0	17.9	20.7	23.6	26.6	29.4	32.4
1,100	450	44	18	1,625	12.2	15.0	17.9	20.7	23.6	26.6	29.4	32.4
1,100	500	44	20	1,500	12.2	15.0	17.9	20.7	23.6	26.6	29.4	32.4
1,100	600	44	24	1,250	12.2	15.0	17.9	20.7	23.6	26.6	29.4	32.4
1,100	700	44	28	1,000	12.2	15.0	17.9	20.7	23.6	26.6	29.4	32.4
1,100	800	44	32	750	12.2	15.0	17.9	20.7	23.6	26.6	29.4	32.4
1,100	900	44	36	500	12.2	15.0	17.9	20.7	23.6	26.6	29.4	32.4
1,100	1,000	44	40	250	12.2	15.0	17.9	20.7	23.6	26.6	29.4	32.4
1,200	450	48	18	1,875	12.9	16.1	19.2	22.4	25.5	28.7	31.8	35.0
1,200	500	48	20	1,750	12.9	16.1	19.2	22.4	25.5	28.7	31.8	35.0
1,200	600	48	24	1,500	12.9	16.1	19.2	22.4	25.5	28.7	31.8	35.0
1,200	700	48	28	1,250	12.9	16.1	19.2	22.4	25.5	28.7	31.8	35.0
1,200	800	48	32	1,000	12.9	16.1	19.2	22.4	25.5	28.7	31.8	35.0
1,200	900	48	36	750	12.9	16.1	19.2	22.4	25.5	28.7	31.8	35.0
1,200	1,000	48	40	500	12.9	16.1	19.2	22.4	25.5	28.7	31.8	35.0
1,200	1,100	48	44	250	12.9	16.1	19.2	22.4	25.5	28.7	31.8	35.0
1,300	500	52	20	2,000	13.7	17.1	20.4	23.9	27.3	30.8	34.2	37.7
1,300	600	52	24	1,750	13.7	17.1	20.4	23.9	27.3	30.8	34.2	37.7
1,300	700	52	28	1,500	13.7	17.1	20.4	23.9	27.3	30.8	34.2	37.7
1,300	800	52	32	1,250	13.7	17.1	20.4	23.9	27.3	30.8	34.2	37.7
1,300	900	52	36	1,000	13.7	17.1	20.4	23.9	27.3	30.8	34.2	37.7
1,300	1,000	52	40	750	13.7	17.1	20.4	23.9	27.3	30.8	34.2	37.7

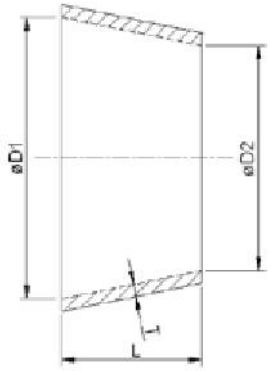

Dimension Table

Design Pressure: 3 Barg – 10 Barg

Nominal Diameter				L	Wall Thickness, t PN 3	Wall Thickness, t PN 4	Wall Thickness, t PN 5	Wall Thickness, t PN 6	Wall Thickness, t PN 7	Wall Thickness, t PN 8	Wall Thickness, t PN 9	Wall Thickness, t PN 10
(mm)		(inch)										
øD1	øD2	øD1	øD2	(mm)	(mm)	(mm)	(mm)	(mm)	(mm)	(mm)	(mm)	(mm)
1,300	1,100	52	44	500	13.7	17.1	20.4	23.9	27.3	30.8	34.2	37.7
1,300	1,200	52	48	250	13.7	17.1	20.4	23.9	27.3	30.8	34.2	37.7
1,350	500	54	20	2,125	14.1	17.6	21.2	24.6	28.2	31.8	35.4	38.9
1,350	600	54	24	1,875	14.1	17.6	21.2	24.6	28.2	31.8	35.4	38.9
1,350	700	54	28	1,625	14.1	17.6	21.2	24.6	28.2	31.8	35.4	38.9
1,350	800	54	32	1,375	14.1	17.6	21.2	24.6	28.2	31.8	35.4	38.9
1,350	900	54	36	1,125	14.1	17.6	21.2	24.6	28.2	31.8	35.4	38.9
1,350	1,000	54	40	875	14.1	17.6	21.2	24.6	28.2	31.8	35.4	38.9
1,350	1,100	54	44	625	14.1	17.6	21.2	24.6	28.2	31.8	35.4	38.9
1,350	1,200	54	48	375	14.1	17.6	21.2	24.6	28.2	31.8	35.4	38.9
1,400	600	56	24	2,000	14.4	18.2	21.8	25.4	29.1	32.9	36.5	40.2
1,400	700	56	28	1,750	14.4	18.2	21.8	25.4	29.1	32.9	36.5	40.2
1,400	800	56	32	1,500	14.4	18.2	21.8	25.4	29.1	32.9	36.5	40.2
1,400	900	56	36	1,250	14.4	18.2	21.8	25.4	29.1	32.9	36.5	40.2
1,400	1,000	56	40	1,000	14.4	18.2	21.8	25.4	29.1	32.9	36.5	40.2
1,400	1,100	56	44	750	14.4	18.2	21.8	25.4	29.1	32.9	36.5	40.2
1,400	1,200	56	48	500	14.4	18.2	21.8	25.4	29.1	32.9	36.5	40.2
1,400	1,300	56	52	250	14.4	18.2	21.8	25.4	29.1	32.9	36.5	40.2
1,500	700	60	28	2,000	15.2	19.1	23.1	27.0	30.9	35.0	38.9	42.9
1,500	800	60	32	1,750	15.2	19.1	23.1	27.0	30.9	35.0	38.9	42.9
1,500	900	60	36	1,500	15.2	19.1	23.1	27.0	30.9	35.0	38.9	42.9
1,500	1,000	60	40	1,250	15.2	19.1	23.1	27.0	30.9	35.0	38.9	42.9
1,500	1,100	60	44	1,000	15.2	19.1	23.1	27.0	30.9	35.0	38.9	42.9
1,500	1,200	60	48	750	15.2	19.1	23.1	27.0	30.9	35.0	38.9	42.9
1,500	1,300	60	52	500	15.2	19.1	23.1	27.0	30.9	35.0	38.9	42.9

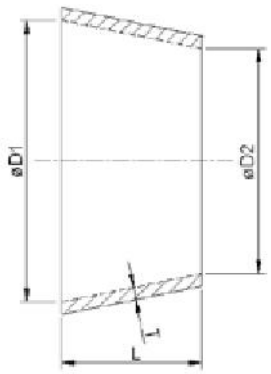

Dimension Table

Design Pressure: 3 Barg – 10 Barg

Nominal Diameter				L	Wall Thickness, T PN 3	Wall Thickness, T PN 4	Wall Thickness, T PN 5	Wall Thickness, T PN 6	Wall Thickness, T PN 7	Wall Thickness, T PN 8	Wall Thickness, T PN 9	Wall Thickness, T PN 10
(mm)		(inch)										
øD1	øD2	øD1	øD2	(mm)	(mm)	(mm)	(mm)	(mm)	(mm)	(mm)	(mm)	(mm)
1,500	1,400	60	56	250	15.2	19.1	23.1	27.0	30.9	35.0	38.9	42.9
1,600	800	64	32	2,000	16.1	20.1	24.3	28.5	32.7	37.1	41.3	45.5
1,600	900	64	36	1,750	16.1	20.1	24.3	28.5	32.7	37.1	41.3	45.5
1,600	1,000	64	40	1,500	16.1	20.1	24.3	28.5	32.7	37.1	41.3	45.5
1,600	1,100	64	44	1,250	16.1	20.1	24.3	28.5	32.7	37.1	41.3	45.5
1,600	1,200	64	48	1,000	16.1	20.1	24.3	28.5	32.7	37.1	41.3	45.5
1,600	1,300	64	52	750	16.1	20.1	24.3	28.5	32.7	37.1	41.3	45.5
1,600	1,400	64	56	500	16.1	20.1	24.3	28.5	32.7	37.1	41.3	45.5
1,600	1,500	64	60	250	16.1	20.1	24.3	28.5	32.7	37.1	41.3	45.5
1,700	900	68	36	2,000	16.8	21.2	25.7	30.2	34.7	39.0	43.7	48.2
1,700	1,000	68	40	1,750	16.8	21.2	25.7	30.2	34.7	39.0	43.7	48.2
1,700	1,100	68	44	1,500	16.8	21.2	25.7	30.2	34.7	39.0	43.7	48.2
1,700	1,200	68	48	1,250	16.8	21.2	25.7	30.2	34.7	39.0	43.7	48.2
1,700	1,300	68	52	1,000	16.8	21.2	25.7	30.2	34.7	39.0	43.7	48.2
1,700	1,400	68	56	750	16.8	21.2	25.7	30.2	34.7	39.0	43.7	48.2
1,700	1,500	68	60	500	16.8	21.2	25.7	30.2	34.7	39.0	43.7	48.2
1,700	1,600	68	64	250	16.8	21.2	25.7	30.2	34.7	39.0	43.7	48.2
1,800	1,000	72	40	2,000	17.6	22.2	27.0	31.7	36.5	41.1	45.9	50.7
1,800	1,100	72	44	1,750	17.6	22.2	27.0	31.7	36.5	41.1	45.9	50.7
1,800	1,200	72	48	1,500	17.6	22.2	27.0	31.7	36.5	41.1	45.9	50.7
1,800	1,300	72	52	1,250	17.6	22.2	27.0	31.7	36.5	41.1	45.9	50.7
1,800	1,400	72	56	1,000	17.6	22.2	27.0	31.7	36.5	41.1	45.9	50.7
1,800	1,500	72	60	750	17.6	22.2	27.0	31.7	36.5	41.1	45.9	50.7
1,800	1,600	72	64	500	17.6	22.2	27.0	31.7	36.5	41.1	45.9	50.7
1,800	1,700	72	68	250	17.6	22.2	27.0	31.7	36.5	41.1	45.9	50.7

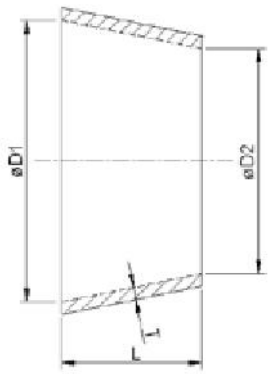

Dimension Table

Design Pressure: 3 Barg – 10 Barg

Nominal Diameter				L	Wall Thickness, T PN 3	Wall Thickness, T PN 4	Wall Thickness, T PN 5	Wall Thickness, T PN 6	Wall Thickness, T PN 7	Wall Thickness, T PN 8	Wall Thickness, T PN 9	Wall Thickness, T PN 10
(mm)		(inch)										
øD1	øD2	øD1	øD2	(mm)	(mm)	(mm)	(mm)	(mm)	(mm)	(mm)	(mm)	(mm)
1,900	1,100	76	44	2,000	18.3	23.3	28.2	33.3	38.3	43.2	48.3	53.4
1,900	1,200	76	48	1,750	18.3	23.3	28.2	33.3	38.3	43.2	48.3	53.4
1,900	1,300	76	52	1,500	18.3	23.3	28.2	33.3	38.3	43.2	48.3	53.4
1,900	1,400	76	56	1,250	18.3	23.3	28.2	33.3	38.3	43.2	48.3	53.4
1,900	1,500	76	60	1,000	18.3	23.3	28.2	33.3	38.3	43.2	48.3	53.4
1,900	1,600	76	64	750	18.3	23.3	28.2	33.3	38.3	43.2	48.3	53.4
1,900	1,700	76	68	500	18.3	23.3	28.2	33.3	38.3	43.2	48.3	53.4
1,900	1,800	76	72	250	18.3	23.3	28.2	33.3	38.3	43.2	48.3	53.4
2,000	1,200	80	48	2,000	19.1	24.3	29.6	34.8	40.1	45.3	50.7	56.0
2,000	1,300	80	52	1,750	19.1	24.3	29.6	34.8	40.1	45.3	50.7	56.0
2,000	1,400	80	56	1,500	19.1	24.3	29.6	34.8	40.1	45.3	50.7	56.0
2,000	1,500	80	60	1,250	19.1	24.3	29.6	34.8	40.1	45.3	50.7	56.0
2,000	1,600	80	64	1,000	19.1	24.3	29.6	34.8	40.1	45.3	50.7	56.0
2,000	1,700	80	68	750	19.1	24.3	29.6	34.8	40.1	45.3	50.7	56.0
2,000	1,800	80	72	500	19.1	24.3	29.6	34.8	40.1	45.3	50.7	56.0
2,000	1,900	80	76	250	19.1	24.3	29.6	34.8	40.1	45.3	50.7	56.0
2,100	1,300	84	52	2,000	19.8	25.4	30.9	36.3	41.9	47.4	53.0	58.7
2,100	1,400	84	56	1,750	19.8	25.4	30.9	36.3	41.9	47.4	53.0	58.7
2,100	1,500	84	60	1,500	19.8	25.4	30.9	36.3	41.9	47.4	53.0	58.7
2,100	1,600	84	64	1,250	19.8	25.4	30.9	36.3	41.9	47.4	53.0	58.7
2,100	1,700	84	68	1,000	19.8	25.4	30.9	36.3	41.9	47.4	53.0	58.7
2,100	1,800	84	72	750	19.8	25.4	30.9	36.3	41.9	47.4	53.0	58.7
2,100	1,900	84	76	500	19.8	25.4	30.9	36.3	41.9	47.4	53.0	58.7
2,100	2,000	84	80	250	19.8	25.4	30.9	36.3	41.9	47.4	53.0	58.7
2,200	1,400	88	56	2,000	20.7	26.4	32.1	38.0	43.7	49.5	55.4	61.2

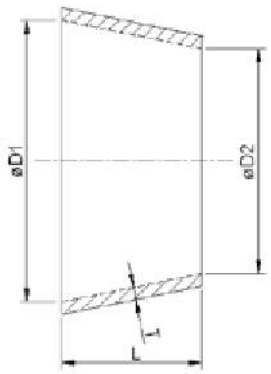

Dimension Table

Design Pressure: 3 Barg – 10 Barg

Nominal Diameter				L	Wall Thickness, t PN 3	Wall Thickness, t PN 4	Wall Thickness, t PN 5	Wall Thickness, t PN 6	Wall Thickness, t PN 7	Wall Thickness, t PN 8	Wall Thickness, t PN 9	Wall Thickness, t PN 10
(mm)		(inch)										
øD1	øD2	øD1	øD2	(mm)	(mm)	(mm)	(mm)	(mm)	(mm)	(mm)	(mm)	(mm)
2,200	1,500	88	60	1,750	20.7	26.4	32.1	38.0	43.7	49.5	55.4	61.2
2,200	1,600	88	64	1,500	20.7	26.4	32.1	38.0	43.7	49.5	55.4	61.2
2,200	1,700	88	68	1,250	20.7	26.4	32.1	38.0	43.7	49.5	55.4	61.2
2,200	1,800	88	72	1,000	20.7	26.4	32.1	38.0	43.7	49.5	55.4	61.2
2,200	1,900	88	76	750	20.7	26.4	32.1	38.0	43.7	49.5	55.4	61.2
2,200	2,000	88	80	500	20.7	26.4	32.1	38.0	43.7	49.5	55.4	61.2
2,200	2,100	88	84	250	20.7	26.4	32.1	38.0	43.7	49.5	55.4	61.2
2,300	1,500	92	60	2,000	21.5	27.5	33.5	39.5	45.6	51.6	57.8	63.9
2,300	1,600	92	64	1,750	21.5	27.5	33.5	39.5	45.6	51.6	57.8	63.9
2,300	1,700	92	68	1,500	21.5	27.5	33.5	39.5	45.6	51.6	57.8	63.9
2,300	1,800	92	72	1,250	21.5	27.5	33.5	39.5	45.6	51.6	57.8	63.9
2,300	1,900	92	76	1,000	21.5	27.5	33.5	39.5	45.6	51.6	57.8	63.9
2,300	2,000	92	80	750	21.5	27.5	33.5	39.5	45.6	51.6	57.8	63.9
2,300	2,100	92	84	500	21.5	27.5	33.5	39.5	45.6	51.6	57.8	63.9
2,300	2,200	92	88	250	21.5	27.5	33.5	39.5	45.6	51.6	57.8	63.9
2,400	1,600	96	64	2,000	22.2	28.5	34.8	41.1	47.4	53.7	60.0	66.5
2,400	1,700	96	68	1,750	22.2	28.5	34.8	41.1	47.4	53.7	60.0	66.5
2,400	1,800	96	72	1,500	22.2	28.5	34.8	41.1	47.4	53.7	60.0	66.5
2,400	1,900	96	76	1,250	22.2	28.5	34.8	41.1	47.4	53.7	60.0	66.5
2,400	2,000	96	80	1,000	22.2	28.5	34.8	41.1	47.4	53.7	60.0	66.5
2,400	2,100	96	84	750	22.2	28.5	34.8	41.1	47.4	53.7	60.0	66.5
2,400	2,200	96	88	500	22.2	28.5	34.8	41.1	47.4	53.7	60.0	66.5
2,400	2,300	96	92	250	22.2	28.5	34.8	41.1	47.4	53.7	60.0	66.5
2,500	1,700	100	68	2,000	23.0	29.6	36.0	42.6	49.2	55.8	62.4	69.0
2,500	1,800	100	72	1,750	23.0	29.6	36.0	42.6	49.2	55.8	62.4	69.0

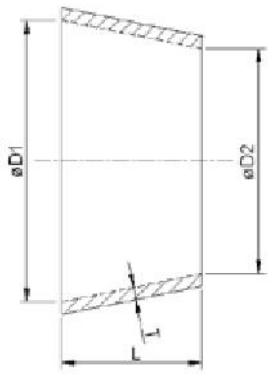

Dimension Table

Design Pressure: 3 Barg – 10 Barg

Nominal Diameter				L	Wall Thickness, t PN 3	Wall Thickness, t PN 4	Wall Thickness, t PN 5	Wall Thickness, t PN 6	Wall Thickness, t PN 7	Wall Thickness, t PN 8	Wall Thickness, t PN 9	Wall Thickness, t PN 10
(mm)		(inch)										
øD1	øD2	øD1	øD2	(mm)	(mm)	(mm)	(mm)	(mm)	(mm)	(mm)	(mm)	(mm)
2,500	1,900	100	76	1,500	23.0	29.6	36.0	42.6	49.2	55.8	62.4	69.0
2,500	2,000	100	80	1,250	23.0	29.6	36.0	42.6	49.2	55.8	62.4	69.0
2,500	2,100	100	84	1,000	23.0	29.6	36.0	42.6	49.2	55.8	62.4	69.0
2,500	2,200	100	88	750	23.0	29.6	36.0	42.6	49.2	55.8	62.4	69.0
2,500	2,300	100	92	500	23.0	29.6	36.0	42.6	49.2	55.8	62.4	69.0
2,500	2,400	100	96	250	23.0	29.6	36.0	42.6	49.2	55.8	62.4	69.0
2,600	1,800	104	72	2,000	23.7	30.6	37.4	44.3	51.0	57.9	64.8	71.7
2,600	1,900	104	76	1,750	23.7	30.6	37.4	44.3	51.0	57.9	64.8	71.7
2,600	2,000	104	80	1,500	23.7	30.6	37.4	44.3	51.0	57.9	64.8	71.7
2,600	2,100	104	84	1,250	23.7	30.6	37.4	44.3	51.0	57.9	64.8	71.7
2,600	2,200	104	88	1,000	23.7	30.6	37.4	44.3	51.0	57.9	64.8	71.7
2,600	2,300	104	92	750	23.7	30.6	37.4	44.3	51.0	57.9	64.8	71.7
2,600	2,400	104	96	500	23.7	30.6	37.4	44.3	51.0	57.9	64.8	71.7
2,600	2,500	104	100	250	23.7	30.6	37.4	44.3	51.0	57.9	64.8	71.7
2,700	1,900	108	76	2,000	24.6	31.7	38.7	45.8	52.8	60.0	67.2	74.3
2,700	2,000	108	80	1,750	24.6	31.7	38.7	45.8	52.8	60.0	67.2	74.3
2,700	2,100	108	84	1,500	24.6	31.7	38.7	45.8	52.8	60.0	67.2	74.3
2,700	2,200	108	88	1,250	24.6	31.7	38.7	45.8	52.8	60.0	67.2	74.3
2,700	2,300	108	92	1,000	24.6	31.7	38.7	45.8	52.8	60.0	67.2	74.3
2,700	2,400	108	96	750	24.6	31.7	38.7	45.8	52.8	60.0	67.2	74.3
2,700	2,500	108	100	500	24.6	31.7	38.7	45.8	52.8	60.0	67.2	74.3
2,700	2,600	108	104	250	24.6	31.7	38.7	45.8	52.8	60.0	67.2	74.3
2,800	2,000	112	80	2,000	25.4	32.7	39.9	47.3	54.8	62.1	69.5	77.0
2,800	2,100	112	84	1,750	25.4	32.7	39.9	47.3	54.8	62.1	69.5	77.0
2,800	2,200	112	88	1,500	25.4	32.7	39.9	47.3	54.8	62.1	69.5	77.0

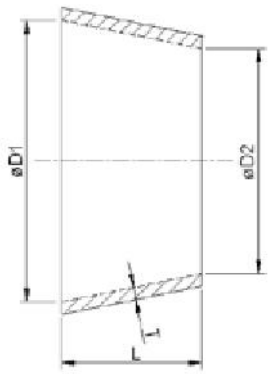

Dimension Table

Design Pressure: 3 Barg – 10 Barg

Nominal Diameter				L	Wall Thickness, T PN 3	Wall Thickness, T PN 4	Wall Thickness, T PN 5	Wall Thickness, T PN 6	Wall Thickness, T PN 7	Wall Thickness, T PN 8	Wall Thickness, T PN 9	Wall Thickness, T PN 10
(mm)		(inch)										
øD1	øD2	øD1	øD2	(mm)	(mm)	(mm)	(mm)	(mm)	(mm)	(mm)	(mm)	(mm)
2,800	2,300	112	92	1,250	25.4	32.7	39.9	47.3	54.8	62.1	69.5	77.0
2,800	2,400	112	96	1,000	25.4	32.7	39.9	47.3	54.8	62.1	69.5	77.0
2,800	2,500	112	100	750	25.4	32.7	39.9	47.3	54.8	62.1	69.5	77.0
2,800	2,600	112	104	500	25.4	32.7	39.9	47.3	54.8	62.1	69.5	77.0
2,800	2,700	112	108	250	25.4	32.7	39.9	47.3	54.8	62.1	69.5	77.0
2,900	2,100	116	84	2,000	26.1	33.6	41.3	48.9	56.6	64.2	71.9	79.5
2,900	2,200	116	88	1,750	26.1	33.6	41.3	48.9	56.6	64.2	71.9	79.5
2,900	2,300	116	92	1,500	26.1	33.6	41.3	48.9	56.6	64.2	71.9	79.5
2,900	2,400	116	96	1,250	26.1	33.6	41.3	48.9	56.6	64.2	71.9	79.5
2,900	2,500	116	100	1,000	26.1	33.6	41.3	48.9	56.6	64.2	71.9	79.5
2,900	2,600	116	104	750	26.1	33.6	41.3	48.9	56.6	64.2	71.9	79.5
2,900	2,700	116	108	500	26.1	33.6	41.3	48.9	56.6	64.2	71.9	79.5
2,900	2,800	116	112	250	26.1	33.6	41.3	48.9	56.6	64.2	71.9	79.5
3,000	2,200	120	88	2,000	26.9	34.7	42.6	50.4	58.4	66.3	74.3	82.2
3,000	2,300	120	92	1,750	26.9	34.7	42.6	50.4	58.4	66.3	74.3	82.2
3,000	2,400	120	96	1,500	26.9	34.7	42.6	50.4	58.4	66.3	74.3	82.2
3,000	2,500	120	100	1,250	26.9	34.7	42.6	50.4	58.4	66.3	74.3	82.2
3,000	2,600	120	104	1,000	26.9	34.7	42.6	50.4	58.4	66.3	74.3	82.2
3,000	2,700	120	108	750	26.9	34.7	42.6	50.4	58.4	66.3	74.3	82.2
3,000	2,800	120	112	500	26.9	34.7	42.6	50.4	58.4	66.3	74.3	82.2
3,000	2,900	120	116	250	26.9	34.7	42.6	50.4	58.4	66.3	74.3	82.2

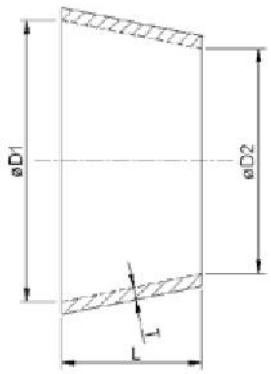

Dimension Table

Design Pressure: 3 Barg – 10 Barg

Nominal Diameter				L	Wall Thickness, T PN 3	Wall Thickness, T PN 4	Wall Thickness, T PN 5	Wall Thickness, T PN 6	Wall Thickness, T PN 7	Wall Thickness, T PN 8	Wall Thickness, T PN 9	Wall Thickness, T PN 10
(mm)		(inch)										
øD1	øD2	øD1	øD2	(mm)	(mm)	(mm)	(mm)	(mm)	(mm)	(mm)	(mm)	(mm)
2,800	2,300	112	92	1,250	25.4	32.7	39.9	47.3	54.8	62.1	69.5	77.0
2,800	2,400	112	96	1,000	25.4	32.7	39.9	47.3	54.8	62.1	69.5	77.0
2,800	2,500	112	100	750	25.4	32.7	39.9	47.3	54.8	62.1	69.5	77.0
2,800	2,600	112	104	500	25.4	32.7	39.9	47.3	54.8	62.1	69.5	77.0
2,800	2,700	112	108	250	25.4	32.7	39.9	47.3	54.8	62.1	69.5	77.0
2,900	2,100	116	84	2,000	26.1	33.6	41.3	48.9	56.6	64.2	71.9	79.5
2,900	2,200	116	88	1,750	26.1	33.6	41.3	48.9	56.6	64.2	71.9	79.5
2,900	2,300	116	92	1,500	26.1	33.6	41.3	48.9	56.6	64.2	71.9	79.5
2,900	2,400	116	96	1,250	26.1	33.6	41.3	48.9	56.6	64.2	71.9	79.5
2,900	2,500	116	100	1,000	26.1	33.6	41.3	48.9	56.6	64.2	71.9	79.5
2,900	2,600	116	104	750	26.1	33.6	41.3	48.9	56.6	64.2	71.9	79.5
2,900	2,700	116	108	500	26.1	33.6	41.3	48.9	56.6	64.2	71.9	79.5
2,900	2,800	116	112	250	26.1	33.6	41.3	48.9	56.6	64.2	71.9	79.5
3,000	2,200	120	88	2,000	26.9	34.7	42.6	50.4	58.4	66.3	74.3	82.2
3,000	2,300	120	92	1,750	26.9	34.7	42.6	50.4	58.4	66.3	74.3	82.2
3,000	2,400	120	96	1,500	26.9	34.7	42.6	50.4	58.4	66.3	74.3	82.2
3,000	2,500	120	100	1,250	26.9	34.7	42.6	50.4	58.4	66.3	74.3	82.2
3,000	2,600	120	104	1,000	26.9	34.7	42.6	50.4	58.4	66.3	74.3	82.2
3,000	2,700	120	108	750	26.9	34.7	42.6	50.4	58.4	66.3	74.3	82.2
3,000	2,800	120	112	500	26.9	34.7	42.6	50.4	58.4	66.3	74.3	82.2
3,000	2,900	120	116	250	26.9	34.7	42.6	50.4	58.4	66.3	74.3	82.2

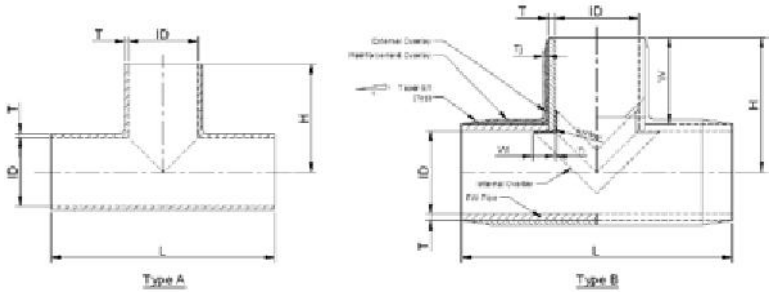

Dimension Table

For Diameter 500 and below, Tees are Molded Type (Type A)
For Diameter 600 and above, Tees are Fabricated Type (Type B)

		PN 3							PN 4							
Nominal Dia		L	H	T	External		Internal		L	H	T	External		Internal		Remark
mm	inch	mm	mm	mm	W mm	Tj mm	Wi mm	Ti mm	mm	mm	mm	W mm	Tj mm	Wi mm	Ti mm	
15	1/2	240	120	8.6	-	-	-	-	240	120	8.6	-	-	-	-	Type A
20	3/4	240	120	8.6	-	-	-	-	240	120	8.6	-	-	-	-	Type A
25	1	250	130	8.6	-	-	-	-	250	130	8.6	-	-	-	-	Type A
32	1 1/4	250	130	8.6	-	-	-	-	250	130	8.6	-	-	-	-	Type A
40	1 1/2	260	130	8.6	-	-	-	-	260	130	8.6	-	-	-	-	Type A
50	2	270	140	8.6	-	-	-	-	270	140	8.6	-	-	-	-	Type A
65	2 1/2	290	150	8.6	-	-	-	-	290	150	8.6	-	-	-	-	Type A
80	3	300	150	8.6	-	-	-	-	300	150	8.6	-	-	-	-	Type A
100	4	320	160	8.6	-	-	-	-	320	160	8.6	-	-	-	-	Type A
125	5	350	180	8.6	-	-	-	-	350	180	8.6	-	-	-	-	Type A
150	6	370	190	8.6	-	-	-	-	370	190	8.6	-	-	-	-	Type A
200	8	420	210	8.6	-	-	-	-	420	210	8.6	-	-	-	-	Type A
250	10	470	240	8.6	-	-	-	-	470	240	8.6	-	-	-	-	Type A
300	12	520	260	8.6	-	-	-	-	520	260	8.6	-	-	-	-	Type A
350	14	600	300	8.6	-	-	-	-	600	300	8.6	-	-	-	-	Type A
400	16	670	340	8.6	-	-	-	-	670	340	9.2	-	-	-	-	Type A
450	18	750	380	8.6	-	-	-	-	750	380	9.9	-	-	-	-	Type A
500	20	820	410	8.8	-	-	-	-	830	420	10.4	-	-	-	-	Type A
600	24	970	490	5.5	184.5	4.4	150	2.1	980	490	6.5	408.5	5.2	150	2.1	Type B
650	26	1,050	530	5.7	199.3	4.6	200	2.1	1,050	530	6.9	423.1	5.5	200	2.1	Type B
700	28	1,130	570	6.0	214.0	4.8	200	2.1	1,130	570	7.2	462.8	5.8	200	2.1	Type B
750	30	1,200	600	6.2	218.8	5.0	200	2.1	1,210	610	7.5	502.5	6.0	200	2.1	Type B
800	32	1,280	640	6.5	233.5	5.2	200	2.1	1,280	640	7.9	532.1	6.3	200	2.1	Type B
900	36	1,430	720	7.0	263.0	5.6	250	2.1	1,440	720	8.6	586.4	6.9	250	2.1	Type B
1,000	40	1,580	790	7.5	282.5	6.0	250	2.1	1,590	800	9.3	665.7	7.4	250	2.1	Type B
1,050	42	1,660	830	7.8	297.2	6.2	300	3.6	1,660	830	9.6	670.4	7.7	300	3.6	Type B

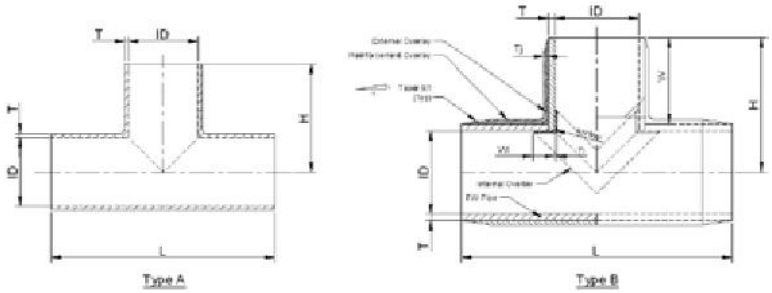

Dimension Table

For Diameter 500 and below, Tees are Molded Type (Type A)
For Diameter 600 and above, Tees are Fabricated Type (Type B)

		PN 3							PN 4							
Nominal Dia		L	H	T	External		Internal		L	H	T	External		Internal		Remark
mm	inch	mm	mm	mm	W mm	Tj mm	Wi mm	Ti mm	mm	mm	mm	W mm	Tj mm	Wi mm	Ti mm	
1,100	44	1,730	870	8.1	311.9	6.5	300	3.6	1,740	870	10.0	710.0	8.0	300	3.6	Type B
1,200	48	1,890	950	8.6	341.4	6.9	300	3.6	1,890	950	10.7	789.3	8.6	300	3.6	Type B
1,300	52	2,040	1,020	9.1	360.9	7.3	350	3.6	2,050	1,030	11.4	843.6	9.1	350	3.6	Type B
1,350	54	2,110	1,060	9.4	375.6	7.5	350	3.6	2,120	1,060	11.7	873.3	9.4	350	3.6	Type B
1,400	56	2,190	1,100	9.6	390.4	7.7	350	3.6	2,200	1,100	12.1	912.9	9.7	350	3.6	Type B
1,500	60	2,340	1,170	10.1	409.9	8.1	400	5.0	2,350	1,180	12.7	967.3	10.2	400	5.0	Type B
1,600	64	2,490	1,250	10.7	439.3	8.6	400	5.0	2,500	1,250	13.4	1036.6	10.7	400	5.0	Type B
1,700	68	2,650	1,330	11.2	468.8	9.0	450	5.0	2,660	1,330	14.1	1090.9	11.3	450	5.0	Type B
1,800	72	2,800	1,400	11.7	488.3	9.4	450	5.0	2,810	1,410	14.8	1170.2	11.8	450	5.0	Type B
1,900	76	2,950	1,480	12.2	517.8	9.8	500	5.0	2,960	1,480	15.5	1214.5	12.4	500	5.0	Type B
2,000	80	3,100	1,550	12.7	537.3	10.2	500	5.0	3,110	1,560	16.2	1293.8	13.0	500	5.0	Type B
2,100	84	3,250	1,630	13.2	566.8	10.6	550	5.0	3,270	1,640	16.9	1348.1	13.5	550	5.0	Type B
2,200	88	3,400	1,700	13.8	586.2	11.0	500	6.5	3,420	1,710	17.6	1442.4	14.1	500	6.5	Type B
2,300	92	3,560	1,780	14.3	615.7	11.4	600	6.5	3,570	1,790	18.3	1471.7	14.6	600	6.5	Type B
2,400	96	3,710	1,860	14.8	645.2	11.8	600	6.5	3,720	1,860	19.0	1541.0	15.2	600	6.5	Type B
2,500	100	3,860	1,930	15.3	664.7	12.2	650	6.5	3,880	1,940	19.7	1595.3	15.8	650	6.5	Type B
2,600	104	4,010	2,010	15.8	694.2	12.6	650	6.5	4,030	2,020	20.4	1674.6	16.3	650	6.5	Type B
2,700	108	4,160	2,080	16.4	713.6	13.1	700	6.5	4,180	2,090	21.1	1718.9	16.9	700	6.5	Type B
2,800	112	4,320	2,160	16.9	743.1	13.5	700	6.5	4,330	2,170	21.8	1798.2	17.4	700	6.5	Type B
2,900	116	4,470	2,240	17.4	772.6	13.9	750	6.5	4,490	2,250	22.4	1852.6	17.9	750	6.5	Type B
3,000	120	4,620	2,310	17.9	792.1	14.3	750	6.5	4,640	2,320	23.1	1921.9	18.5	750	6.5	Type B

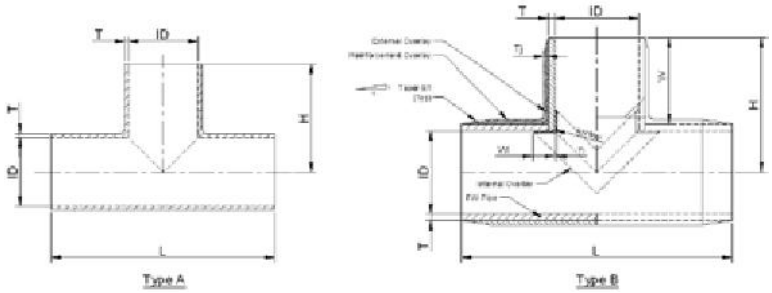

Dimension Table

For Diameter 500 and below, Tees are Molded Type (Type A)
For Diameter 600 and above, Tees are Fabricated Type (Type B)

		PN 5							PN 6							
Nominal Dia		L	H	T	External		Internal		L	H	T	External		Internal		Remark
mm	inch	mm	mm	mm	W mm	Tj mm	Wi mm	Ti mm	mm	mm	mm	W mm	Tj mm	Wi mm	Ti mm	
15	1/2	240	120	8.6	-	-	-	-	240	120	8.6	-	-	-	-	Type A
20	3/4	240	120	8.6	-	-	-	-	240	120	8.6	-	-	-	-	Type A
25	1	250	130	8.6	-	-	-	-	250	130	8.6	-	-	-	-	Type A
32	1 1/4	250	130	8.6	-	-	-	-	250	130	8.6	-	-	-	-	Type A
40	1 1/2	260	130	8.6	-	-	-	-	260	130	8.6	-	-	-	-	Type A
50	2	270	140	8.6	-	-	-	-	270	140	8.6	-	-	-	-	Type A
65	2 1/2	290	150	8.6	-	-	-	-	290	150	8.6	-	-	-	-	Type A
80	3	300	150	8.6	-	-	-	-	300	150	8.6	-	-	-	-	Type A
100	4	320	160	8.6	-	-	-	-	320	160	8.6	-	-	-	-	Type A
125	5	350	180	8.6	-	-	-	-	350	180	8.6	-	-	-	-	Type A
150	6	370	190	8.6	-	-	-	-	370	190	8.6	-	-	-	-	Type A
200	8	420	210	8.6	-	-	-	-	420	210	8.6	-	-	-	-	Type A
250	10	470	240	8.6	-	-	-	-	470	240	9.0	-	-	-	-	Type A
300	12	520	260	9.0	-	-	-	-	520	260	9.9	-	-	-	-	Type A
350	14	600	300	9.7	-	-	-	-	600	300	10.8	-	-	-	-	Type A
400	16	680	340	10.4	-	-	-	-	680	340	11.7	-	-	-	-	Type A
450	18	750	380	11.3	-	-	-	-	760	380	12.6	-	-	-	-	Type A
500	20	830	420	12.1	-	-	-	-	830	420	13.7	-	-	-	-	Type A
600	24	980	490	7.6	182.0	6.1	150	2.1	990	500	8.6	190.9	6.9	150	2.1	Type B
650	26	1,060	530	8.0	196.6	6.4	200	2.1	740	370	9.1	35.4	7.3	200	2.1	Type B
700	28	1,140	570	8.4	211.1	6.7	200	2.1	790	400	9.6	39.8	7.7	200	2.1	Type B
750	30	1,210	610	8.9	225.7	7.1	200	2.1	840	420	10.2	34.3	8.2	200	2.1	Type B
800	32	1,290	650	9.3	239.8	7.4	200	2.1	890	450	10.7	38.3	8.6	200	2.1	Type B
900	36	1,440	720	10.2	259.0	8.2	250	2.1	1,000	500	11.7	37.2	9.4	250	2.1	Type B
1,000	40	1,590	800	11.0	288.5	8.8	250	2.1	1,100	550	12.8	36.7	10.2	250	2.1	Type B
1,050	42	1,670	840	11.5	303.1	9.2	300	3.6	1,150	580	13.3	41.2	10.6	300	3.6	Type B

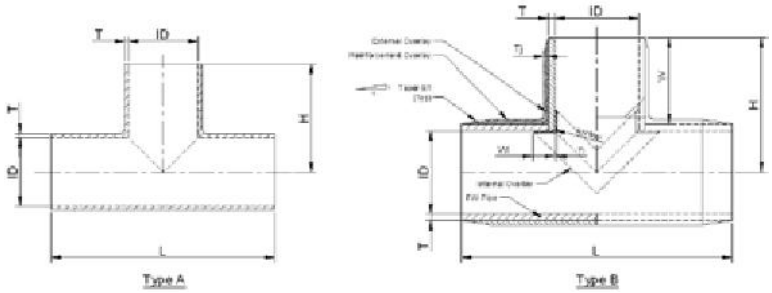

Dimension Table

For Diameter 500 and below, Tees are Molded Type (Type A)
For Diameter 600 and above, Tees are Fabricated Type (Type B)

		PN 5							PN 6							
Nominal Dia		L	H	T	External		Internal		L	H	T	External		Internal		Remark
mm	inch	mm	mm	mm	W mm	Tj mm	Wi mm	Ti mm	mm	mm	mm	W mm	Tj mm	Wi mm	Ti mm	
1,100	44	1,750	880	11.9	311.9	9.5	300	3.6	1,200	600	13.8	35.1	11.0	300	3.6	Type B
1,200	48	1,900	950	12.8	341.4	10.2	300	3.6	1,310	660	14.9	44.1	11.9	300	3.6	Type B
1,300	52	2,050	1,030	13.6	360.9	10.9	350	3.6	1,410	710	15.9	43.6	12.7	350	3.6	Type B
1,350	54	2,130	1,070	14.1	375.6	11.3	350	3.6	1,460	730	16.4	38.1	13.1	350	3.6	Type B
1,400	56	2,210	1,110	14.5	390.4	11.6	350	3.6	1,520	760	16.9	42.0	13.5	350	3.6	Type B
1,500	60	2,360	1,180	15.4	409.9	12.3	400	5.0	1,620	810	18.0	41.0	14.4	400	5.0	Type B
1,600	64	2,510	1,260	16.2	439.3	13.0	400	5.0	1,720	860	19.0	39.9	15.2	400	5.0	Type B
1,700	68	2,670	1,340	17.1	468.8	13.7	450	5.0	1,830	920	20.1	48.9	16.1	450	5.0	Type B
1,800	72	2,820	1,410	18.0	488.3	14.4	450	5.0	1,930	970	21.1	47.8	16.9	450	5.0	Type B
1,900	76	2,970	1,490	18.8	517.8	15.0	500	5.0	2,030	1,020	22.2	46.8	17.8	500	5.0	Type B
2,000	80	3,130	1,570	19.7	537.3	15.8	500	5.0	2,140	1,070	23.2	45.8	18.6	500	5.0	Type B
2,100	84	3,280	1,640	20.6	566.8	16.5	550	5.0	2,240	1,120	24.2	44.7	19.4	550	5.0	Type B
2,200	88	3,430	1,720	21.4	586.2	17.1	500	6.5	2,350	1,180	25.3	53.7	20.2	500	6.5	Type B
2,300	92	3,590	1,800	22.3	615.7	17.8	600	6.5	2,450	1,230	26.3	52.6	21.0	600	6.5	Type B
2,400	96	3,740	1,870	23.2	645.2	18.6	600	6.5	2,550	1,280	27.4	51.6	21.9	600	6.5	Type B
2,500	100	3,890	1,950	24.0	664.7	19.2	650	6.5	2,660	1,330	28.4	50.5	22.7	650	6.5	Type B
2,600	104	4,040	2,020	24.9	694.2	19.9	650	6.5	2,760	1,380	29.5	49.5	23.6	650	6.5	Type B
2,700	108	4,200	2,100	25.8	713.6	20.6	700	6.5	2,860	1,430	30.5	48.5	24.4	700	6.5	Type B
2,800	112	4,350	2,180	26.6	743.1	21.3	700	6.5	2,970	1,490	31.5	57.4	25.2	700	6.5	Type B
2,900	116	4,500	2,250	27.5	772.6	22.0	750	6.5	3,070	1,540	32.6	56.4	26.1	750	6.5	Type B
3,000	120	4,660	2,330	28.4	792.1	22.7	750	6.5	3,180	1,590	33.6	56.4	26.9	750	6.5	Type B

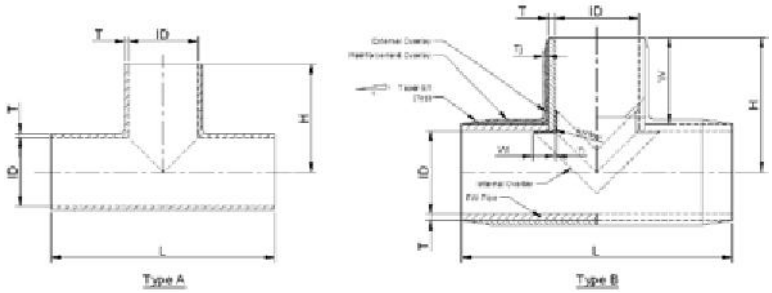

Dimension Table

For Diameter 500 and below, Tees are Molded Type (Type A)
For Diameter 600 and above, Tees are Fabricated Type (Type B)

		PN 7							PN 8							
Nominal Dia		L	H	T	External		Internal		L	H	T	External		Internal		Remark
mm	inch	mm	mm	mm	W mm	Tj mm	Wi mm	Ti mm	mm	mm	mm	W mm	Tj mm	Wi mm	Ti mm	
15	1/2	240	120	8.6	-	-	-	-	240	120	8.6	-	-	-	-	Type A
20	3/4	240	120	8.6	-	-	-	-	240	120	8.6	-	-	-	-	Type A
25	1	250	130	8.6	-	-	-	-	250	130	8.6	-	-	-	-	Type A
32	1 1/4	250	130	8.6	-	-	-	-	250	130	8.6	-	-	-	-	Type A
40	1 1/2	260	130	8.6	-	-	-	-	260	130	8.6	-	-	-	-	Type A
50	2	270	140	8.6	-	-	-	-	270	140	8.6	-	-	-	-	Type A
65	2 1/2	290	150	8.6	-	-	-	-	290	150	8.6	-	-	-	-	Type A
80	3	300	150	8.6	-	-	-	-	300	150	8.6	-	-	-	-	Type A
100	4	320	160	8.6	-	-	-	-	320	160	8.6	-	-	-	-	Type A
125	5	350	180	8.6	-	-	-	-	350	180	8.6	-	-	-	-	Type A
150	6	370	190	8.6	-	-	-	-	370	190	8.6	-	-	-	-	Type A
200	8	420	210	8.6	-	-	-	-	420	210	9.2	-	-	-	-	Type A
250	10	470	240	9.7	-	-	-	-	530	270	10.4	-	-	-	-	Type A
300	12	580	290	10.8	-	-	-	-	590	300	11.7	-	-	-	-	Type A
350	14	640	320	11.9	-	-	-	-	640	320	13.0	-	-	-	-	Type A
400	16	690	350	13.0	-	-	-	-	720	360	14.2	-	-	-	-	Type A
450	18	770	390	14.0	-	-	-	-	770	390	15.5	-	-	-	-	Type A
500	20	840	420	15.1	-	-	-	-	890	450	16.7	-	-	-	-	Type A
600	24	990	500	9.7	189.7	7.8	150	2.1	1,000	500	10.7	188.6	8.6	150	2.1	Type B
650	26	1,070	540	10.3	204.1	8.2	200	2.1	1,120	560	11.4	222.9	9.1	200	2.1	Type B
700	28	1,140	570	10.9	208.5	8.7	200	2.1	1,170	590	12.1	227.2	9.7	200	2.1	Type B
750	30	1,220	610	11.5	222.9	9.2	200	2.1	1,290	650	12.8	261.5	10.2	200	2.1	Type B
800	32	1,300	650	12.1	236.7	9.7	200	2.1	1,340	670	13.5	255.1	10.8	200	2.1	Type B
900	36	1,450	730	13.3	265.5	10.6	250	2.1	1,470	740	14.9	273.7	11.9	250	2.1	Type B
1,000	40	1,610	810	14.5	294.9	11.6	250	2.1	1,650	830	16.3	313.0	13.0	250	2.1	Type B
1,050	42	1,680	840	15.1	299.3	12.1	300	3.6	1,700	850	17.0	307.3	13.6	300	3.6	Type B

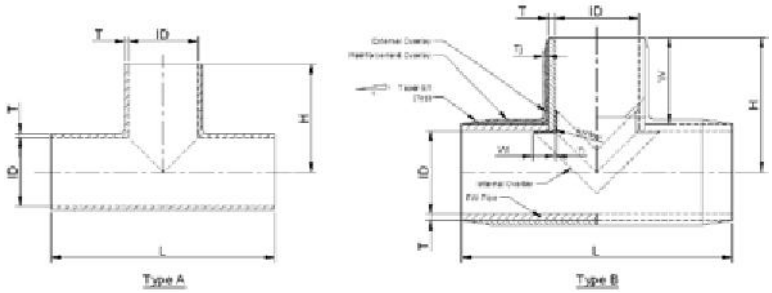

Dimension Table

For Diameter 500 and below, Tees are Molded Type (Type A)
For Diameter 600 and above, Tees are Fabricated Type (Type B)

		PN 7							PN 8							
Nominal Dia		L	H	T	External		Internal		L	H	T	External		Internal		Remark
mm	inch	mm	mm	mm	W mm	Tj mm	Wi mm	Ti mm	mm	mm	mm	W mm	Tj mm	Wi mm	Ti mm	
1,100	44	1,760	880	15.7	313.0	12.6	300	3.6	1,770	890	17.7	320.9	14.2	300	3.6	Type B
1,200	48	1,920	960	17.0	341.8	13.6	300	3.6	1,930	970	19.1	349.5	15.3	300	3.6	Type B
1,300	52	2,070	1,040	18.2	371.2	14.6	350	3.6	2,100	1,050	20.5	378.8	16.4	350	3.6	Type B
1,350	54	2,150	1,080	18.8	385.6	15.0	350	3.6	2,160	1,080	21.2	383.1	17.0	350	3.6	Type B
1,400	56	2,220	1,110	19.4	389.4	15.5	350	3.6	2,230	1,120	21.9	396.7	17.5	350	3.6	Type B
1,500	60	2,380	1,190	20.6	418.2	16.5	400	5.0	2,410	1,210	23.3	435.3	18.6	400	5.0	Type B
1,600	64	2,530	1,270	21.8	446.9	17.4	400	5.0	2,540	1,270	24.7	444.0	19.8	400	5.0	Type B
1,700	68	2,690	1,350	23.1	475.7	18.5	450	5.0	2,700	1,350	26.0	472.6	20.8	450	5.0	Type B
1,800	72	2,840	1,420	24.3	494.5	19.4	450	5.0	2,860	1,430	27.4	501.2	21.9	450	5.0	Type B
1,900	76	3,000	1,500	25.5	523.3	20.4	500	5.0	3,010	1,510	28.8	529.8	23.0	500	5.0	Type B
2,000	80	3,150	1,580	26.7	552.1	21.4	500	5.0	3,170	1,590	30.2	558.4	24.2	500	5.0	Type B
2,100	84	3,310	1,660	27.9	580.9	22.3	550	5.0	3,340	1,670	31.6	587.0	25.3	550	5.0	Type B
2,200	88	3,460	1,730	29.1	599.6	23.3	500	6.5	3,470	1,740	33.0	605.6	26.4	500	6.5	Type B
2,300	92	3,610	1,810	30.4	628.4	24.3	600	6.5	3,630	1,820	34.4	634.2	27.5	600	6.5	Type B
2,400	96	3,770	1,890	31.6	657.2	25.3	600	6.5	3,780	1,890	35.8	652.8	28.6	600	6.5	Type B
2,500	100	3,920	1,960	32.8	676.0	26.2	650	6.5	3,940	1,970	37.2	681.4	29.8	650	6.5	Type B
2,600	104	4,080	2,040	34.0	704.8	27.2	650	6.5	4,100	2,050	38.6	710.0	30.9	650	6.5	Type B
2,700	108	4,230	2,120	35.2	733.5	28.2	700	6.5	4,250	2,130	40.0	738.6	32.0	700	6.5	Type B
2,800	112	4,390	2,200	36.5	762.3	29.2	700	6.5	4,400	2,200	41.4	757.2	33.1	700	6.5	Type B
2,900	116	4,540	2,270	37.7	781.1	30.2	750	6.5	4,560	2,280	42.8	785.8	34.2	750	6.5	Type B
3,000	120	4,700	2,350	38.9	811.1	31.1	750	6.5	4,710	2,360	44.2	815.8	35.4	750	6.5	Type B

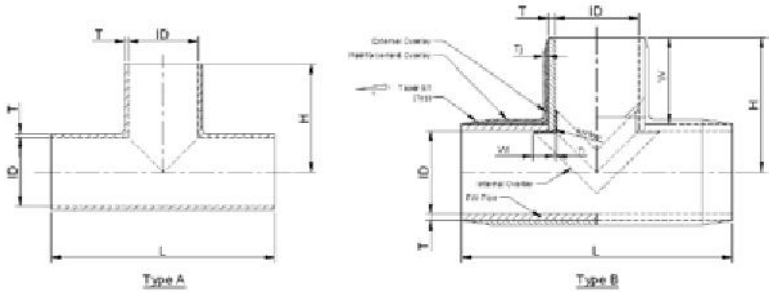

Dimension Table

For Diameter 500 and below, Tees are Molded Type (Type A)
For Diameter 600 and above, Tees are Fabricated Type (Type B)

		PN 9							PN 10							
Nominal Dia		L	H	T	External		Internal		L	H	T	External		Internal		Remark
mm	inch	mm	mm	mm	W mm	Tj mm	Wi mm	Ti mm	mm	mm	mm	W mm	Tj mm	Wi mm	Ti mm	
15	1/2	240	120	8.6	-	-	-	-	240	120	8.6	-	-	-	-	Type A
20	3/4	240	120	8.6	-	-	-	-	240	120	8.6	-	-	-	-	Type A
25	1	250	130	8.6	-	-	-	-	250	130	8.6	-	-	-	-	Type A
32	1 1/4	250	130	8.6	-	-	-	-	250	130	8.6	-	-	-	-	Type A
40	1 1/2	260	130	8.6	-	-	-	-	260	130	8.6	-	-	-	-	Type A
50	2	270	140	8.6	-	-	-	-	270	140	8.6	-	-	-	-	Type A
65	2 1/2	290	150	8.6	-	-	-	-	290	150	8.6	-	-	-	-	Type A
80	3	300	150	8.6	-	-	-	-	300	150	8.6	-	-	-	-	Type A
100	4	320	160	8.6	-	-	-	-	320	160	8.6	-	-	-	-	Type A
125	5	350	180	8.6	-	-	-	-	350	180	8.6	-	-	-	-	Type A
150	6	370	190	8.6	-	-	-	-	370	190	9.0	-	-	-	-	Type A
200	8	420	210	9.9	-	-	-	-	480	240	10.4	-	-	-	-	Type A
250	10	540	270	11.3	-	-	-	-	540	270	12.1	-	-	-	-	Type A
300	12	590	300	12.8	-	-	-	-	620	310	13.7	-	-	-	-	Type A
350	14	670	340	14.0	-	-	-	-	670	340	15.3	-	-	-	-	Type A
400	16	720	360	15.5	-	-	-	-	790	400	16.7	-	-	-	-	Type A
450	18	840	420	16.9	-	-	-	-	840	420	18.4	-	-	-	-	Type A
500	20	890	450	18.4	-	-	-	-	970	490	20.0	-	-	-	-	Type A
600	24	1,070	540	11.8	227.4	9.4	200	2.1	1,140	570	12.8	256.3	10.2	250	2.1	Type B
650	26	1,120	560	12.6	221.7	10.1	200	2.1	1,190	600	13.7	260.4	11.0	250	2.1	Type B
700	28	1,240	620	13.3	255.9	10.6	250	2.1	1,270	640	14.6	274.5	11.7	250	2.1	Type B
750	30	1,300	650	14.1	260.1	11.3	250	2.1	1,330	670	15.5	278.7	12.4	250	2.1	Type B
800	32	1,370	690	14.9	273.5	11.9	250	2.1	1,450	730	16.3	311.9	13.0	300	2.1	Type B
900	36	1,550	780	16.5	311.9	13.2	300	2.1	1,620	810	18.1	340.2	14.5	350	2.1	Type B
1,000	40	1,720	860	18.1	341.2	14.5	350	2.1	1,800	900	19.8	379.3	15.8	350	2.1	Type B
1,050	42	1,780	890	18.8	345.4	15.0	350	3.6	1,850	930	20.7	383.4	16.6	350	3.6	Type B

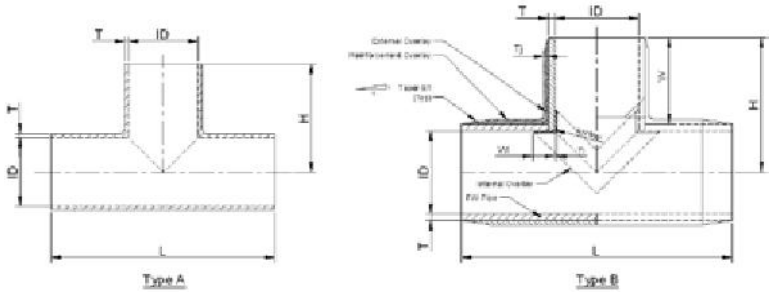

Dimension Table

For Diameter 500 and below, Tees are Molded Type (Type A)
For Diameter 600 and above, Tees are Fabricated Type (Type B)

		PN 9							PN 10							
Nominal Dia		L	H	T	External		Internal		L	H	T	External		Internal		Remark
mm	inch	mm	mm	mm	W mm	Tj mm	Wi mm	Ti mm	mm	mm	mm	W mm	Tj mm	Wi mm	Ti mm	
1,100	44	1,900	950	19.6	378.8	15.7	350	3.6	1,930	970	21.6	396.7	17.3	350	3.6	Type B
1,200	48	2,010	1,010	21.2	387.2	17.0	350	3.6	2,110	1,060	23.3	434.9	18.6	400	3.6	Type B
1,300	52	2,140	1,070	22.8	396.4	18.2	350	3.6	2,280	1,140	25.1	464.1	20.1	450	3.6	Type B
1,350	54	2,260	1,130	23.6	430.7	18.9	400	3.6	2,340	1,170	25.9	468.2	20.7	450	3.6	Type B
1,400	56	2,310	1,160	24.3	434.1	19.4	400	3.6	2,460	1,230	26.8	501.4	21.4	500	3.6	Type B
1,500	60	2,490	1,250	25.9	472.5	20.7	450	5.0	2,590	1,300	28.6	519.7	22.9	500	5.0	Type B
1,600	64	2,660	1,330	27.5	500.9	22.0	500	5.0	2,770	1,390	30.3	557.9	24.2	550	5.0	Type B
1,700	68	2,790	1,400	29.1	519.4	23.3	500	5.0	2,940	1,470	32.1	586.2	25.7	550	5.0	Type B
1,800	72	2,970	1,490	30.6	557.8	24.5	550	5.0	3,120	1,560	33.8	624.4	27.0	600	5.0	Type B
1,900	76	3,140	1,570	32.2	586.2	25.8	550	5.0	3,250	1,630	35.6	642.7	28.5	600	5.0	Type B
2,000	80	3,320	1,660	33.8	624.7	27.0	600	5.0	3,420	1,710	37.3	670.9	29.8	650	5.0	Type B
2,100	84	3,450	1,730	35.3	643.1	28.2	600	5.0	3,600	1,800	39.1	709.2	31.3	700	5.0	Type B
2,200	88	3,620	1,810	36.9	671.5	29.5	650	6.5	3,780	1,890	40.8	747.4	32.6	700	6.5	Type B
2,300	92	3,730	1,870	38.5	680.0	30.8	650	6.5	3,910	1,960	42.6	765.7	34.1	700	6.5	Type B
2,400	96	3,900	1,950	40.0	708.4	32.0	700	6.5	4,080	2,040	44.3	794.0	35.4	750	6.5	Type B
2,500	100	4,080	2,040	41.6	746.8	33.3	700	6.5	4,260	2,130	46.0	832.2	36.8	800	6.5	Type B
2,600	104	4,210	2,110	43.2	765.2	34.6	700	6.5	4,430	2,220	47.8	870.5	38.2	850	6.5	Type B
2,700	108	4,380	2,190	44.8	793.7	35.8	750	6.5	4,570	2,290	49.5	888.7	39.6	850	6.5	Type B
2,800	112	4,560	2,280	46.3	832.1	37.0	800	6.5	4,740	2,370	51.3	917.0	41.0	900	6.5	Type B
2,900	116	4,730	2,370	47.9	870.5	38.3	850	6.5	4,920	2,460	53.0	955.2	42.4	900	6.5	Type B
3,000	120	4,870	2,440	49.5	890.5	39.6	850	6.5	5,090	2,550	54.8	995.2	43.8	950	6.5	Type B

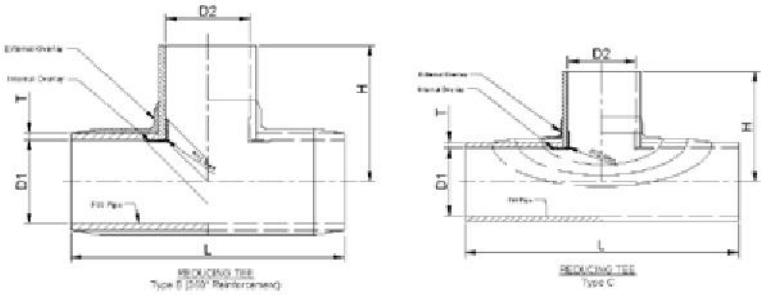

Dimension Table

Design Pressure: 3 Barg

Nominal Dia mm		L	H	Nominal wall thickness, T	Remark
D_1	D_2	mm	mm		
40	20	250	140	8.6	Type A
	25	250	140	8.6	Type A
50	25	250	140	8.6	Type A
	40	270	140	8.6	Type A
65	25	270	150	8.6	Type A
	40	280	150	8.6	Type A
80	25	250	160	8.6	Type A
	40	270	160	8.6	Type A
	50	280	160	8.6	Type A
	65	290	160	8.6	Type A
100	25	250	170	8.6	Type A
	40	270	170	8.6	Type A
	50	280	170	8.6	Type A
	65	290	170	8.6	Type A
	80	310	170	8.6	Type A
125	25	250	180	8.6	Type A
	40	270	180	8.6	Type A
	50	280	180	8.6	Type A
	65	290	180	8.6	Type A
	80	310	180	8.6	Type A
	100	330	180	8.6	Type A
150	25	250	190	8.6	Type A
	40	270	190	8.6	Type A
	50	280	190	8.6	Type A
	65	290	190	8.6	Type A
	80	310	190	8.6	Type A
	100	330	190	8.6	Type A
	125	350	190	8.6	Type A

Nominal Dia mm		L	H	Nominal wall thickness, T	Remark
D_1	D_2	mm	mm		
200	25	250	220	8.6	Type A
	40	270	220	8.6	Type A
	50	280	220	8.6	Type A
	65	290	220	8.6	Type A
	80	310	220	8.6	Type A
	100	330	220	8.6	Type A
	125	350	220	8.6	Type A
	150	380	220	8.6	Type A
250	25	250	240	8.6	Type A
	40	270	240	8.6	Type A
	50	280	240	8.6	Type A
	65	290	240	8.6	Type A
	80	310	240	8.6	Type A
	100	330	240	8.6	Type A
	125	350	240	8.6	Type A
	150	380	240	8.6	Type A
	200	430	240	8.6	Type A
300	25	250	270	8.6	Type A
	40	270	270	8.6	Type A
	50	280	270	8.6	Type A
	65	290	270	8.6	Type A
	80	310	270	8.6	Type A
	100	330	270	8.6	Type A
	125	350	270	8.6	Type A
	150	380	270	8.6	Type A
	200	430	270	8.6	Type A
	250	480	270	8.6	Type A

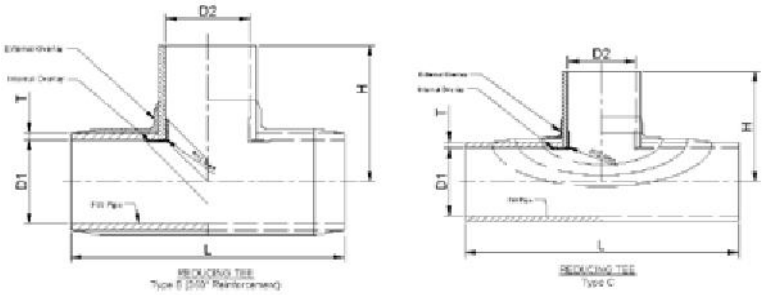

Dimension Table

Design Pressure: 3 Barg

Nominal Dia mm		L	H	Nominal wall thickness, T	Remark
D_1	D_2	mm	mm		
400	100	380	320	8.6	Type A
	125	400	320	8.6	Type A
	150	430	320	8.6	Type A
	200	480	320	8.6	Type A
	250	530	320	8.6	Type A
	300	580	320	8.6	Type A
	350	630	330	8.6	Type A
450	100	400	340	8.6	Type A
	125	430	340	8.6	Type A
	150	450	340	8.6	Type A
	200	500	340	8.6	Type A
	250	550	340	8.6	Type A
	300	600	340	8.6	Type A
	350	650	350	8.6	Type A
	400	700	370	8.6	Type A
500	150	480	370	8.8	Type A
	200	530	370	8.8	Type A
	250	580	370	8.8	Type A
	300	630	370	8.8	Type A
	350	680	380	8.8	Type A
	400	730	390	8.8	Type A
	450	780	400	8.8	Type A
600	200	580	420	9.9	Type B 360°
	250	630	420	9.9	Type B 360°
	300	680	420	9.9	Type B 360°
	350	730	430	9.9	Type B 360°
	400	780	440	9.9	Type B 360°
	450	830	460	9.9	Type B 360°
	500	880	470	9.9	Type B 360°

Nominal Dia mm		L	H	Nominal wall thickness, T	Remark
D_1	D_2	mm	mm		
650	200	610	450	10.3	Type B 360°
	250	660	450	10.3	Type B 360°
	300	710	450	10.3	Type B 360°
	350	760	460	10.3	Type B 360°
	400	810	470	10.3	Type B 360°
	450	860	480	10.3	Type B 360°
	500	910	500	10.3	Type B 360°
700	250	690	470	10.8	Type B 360°
	300	740	470	10.8	Type B 360°
	350	790	480	10.8	Type B 360°
	400	840	500	10.8	Type B 360°
	450	890	510	10.8	Type B 360°
	500	940	520	10.8	Type B 360°
	600	1,040	550	10.8	Type B 360°
750	350	810	510	11.2	Type B 360°
	400	860	520	11.2	Type B 360°
	450	910	530	11.2	Type B 360°
	500	960	550	11.2	Type B 360°
	600	1,060	570	11.2	Type B 360°
	700	1,160	600	11.2	Type B 360°
800	350	840	530	11.7	Type B 360°
	400	890	550	11.7	Type B 360°
	450	940	560	11.7	Type B 360°
	500	990	570	11.7	Type B 360°
	600	1,090	600	11.7	Type B 360°
	700	1,190	620	11.7	Type B 360°

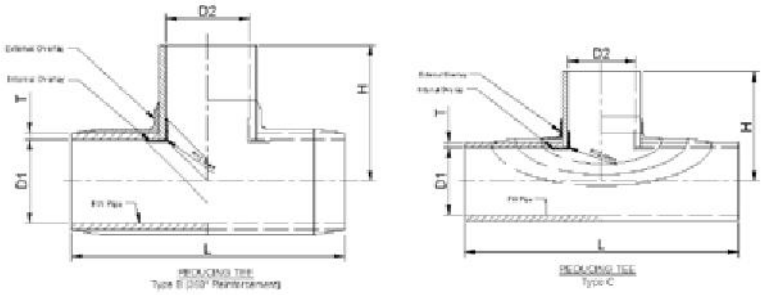

Dimension Table

Design Pressure: 3 Barg

Nominal Dia mm		L	H	Nominal wall thickness, T	Remark
D_1	D_2	mm	mm		
900	400	940	600	12.6	Type B 360°
	450	990	610	12.6	Type B 360°
	500	1,040	620	12.6	Type B 360°
	600	1,140	650	12.6	Type B 360°
	700	1,240	670	12.6	Type B 360°
	800	1,340	700	12.6	Type B 360°
1,000	400	990	650	13.5	Type B 360°
	450	1,040	660	13.5	Type B 360°
	500	1,090	670	13.5	Type B 360°
	600	1,190	700	13.5	Type B 360°
	700	1,290	720	13.5	Type B 360°
	800	1,390	750	13.5	Type B 360°
	900	1,490	770	13.5	Type B 360°
1,050	400	1,020	670	14.0	Type B 360°
	450	1,070	690	14.0	Type B 360°
	500	1,120	700	14.0	Type B 360°
	600	1,220	720	14.0	Type B 360°
	700	1,320	750	14.0	Type B 360°
	800	1,420	770	14.0	Type B 360°
	900	1,520	800	14.0	Type B 360°
	1000	1,620	820	14.0	Type B 360°
1,100	400	1,050	700	14.6	Type B 360°
	450	1,100	710	14.6	Type B 360°
	500	1,150	730	14.6	Type B 360°
	600	1,250	750	14.6	Type B 360°
	700	1,350	780	14.6	Type B 360°
	800	1,450	800	14.6	Type B 360°
	900	1,550	830	14.6	Type B 360°
	1,000	1,650	850	14.6	Type B 360°

Nominal Dia mm		L	H	Nominal wall thickness, T	Remark
D_1	D_2	mm	mm		
1,200	400	1,100	750	15.5	Type B 360°
	450	1,150	760	15.5	Type B 360°
	500	1,200	780	15.5	Type B 360°
	600	1,300	800	15.5	Type B 360°
	700	1,400	830	15.5	Type B 360°
	800	1,500	850	15.5	Type B 360°
	900	1,600	880	15.5	Type B 360°
	1,000	1,700	900	15.5	Type B 360°
	1,100	1,800	930	15.5	Type B 360°
1,300	450	1,200	810	16.4	Type C
	500	1,250	830	16.4	Type B 360°
	600	1,350	850	16.4	Type B 360°
	700	1,450	880	16.4	Type B 360°
	800	1,550	900	16.4	Type B 360°
	900	1,650	930	16.4	Type B 360°
	1,000	1,750	950	16.4	Type B 360°
	1,100	1,850	980	16.4	Type B 360°
	1,200	1,950	1,000	16.4	Type B 360°
1,350	400	1,180	830	16.9	Type C
	450	1,230	840	16.9	Type B 360°
	500	1,280	850	16.9	Type B 360°
	600	1,380	880	16.9	Type B 360°
	700	1,480	900	16.9	Type B 360°
	800	1,580	930	16.9	Type B 360°
	900	1,680	950	16.9	Type B 360°
	1,000	1,780	980	16.9	Type B 360°
	1,100	1,880	1,000	16.9	Type B 360°
	1,200	1,980	1,030	16.9	Type B 360°
	1,300	2,080	1,050	16.9	Type B 360°

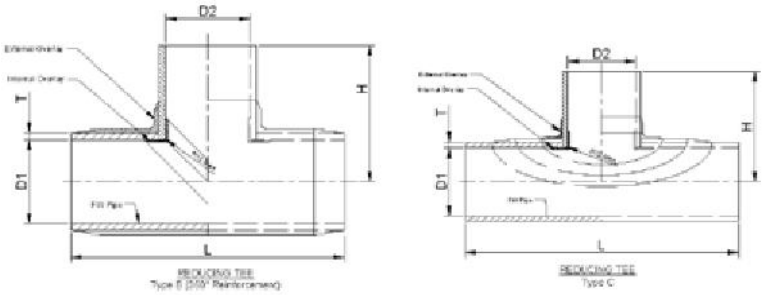

Dimension Table

Design Pressure: 3 Barg

Nominal Dia mm		L	H	Nominal wall thickness, T	Remark
D_1	D_2	mm	mm		
1,400	400	1,200	850	17.3	Type C
	450	1,250	870	17.3	Type C
	500	1,300	880	17.3	Type B 360°
	600	1,400	900	17.3	Type B 360°
	700	1,500	930	17.3	Type B 360°
	800	1,600	950	17.3	Type B 360°
	900	1,700	980	17.3	Type B 360°
	1,000	1,800	1,000	17.3	Type B 360°
	1,100	1,900	1,030	17.3	Type B 360°
	1,200	2,000	1,050	17.3	Type B 360°
	1,300	2,100	1,080	17.3	Type B 360°
1,500	400	1,250	900	18.2	Type C
	450	1,300	920	18.2	Type C
	500	1,350	930	18.2	Type C
	600	1,450	950	18.2	Type B 360°
	700	1,550	980	18.2	Type B 360°
	800	1,650	1,000	18.2	Type B 360°
	900	1,750	1,030	18.2	Type B 360°
	1,000	1,850	1,050	18.2	Type B 360°
	1,100	1,950	1,080	18.2	Type B 360°
	1,200	2,050	1,100	18.2	Type B 360°
	1,300	2,150	1,130	18.2	Type B 360°
	1,400	2,250	1,150	18.2	Type B 360°
1,600	400	1,300	950	19.3	Type C
	450	1,350	970	19.3	Type C
	500	1,400	980	19.3	Type C
	600	1,500	1,000	19.3	Type B 360°
	700	1,600	1,030	19.3	Type B 360°

Nominal Dia mm		L	H	Nominal wall thickness, T	Remark
D_1	D_2	mm	mm		
1,600	800	1,700	1,050	19.3	Type B 360°
	900	1,800	1,080	19.3	Type B 360°
	1,000	1,900	1,100	19.3	Type B 360°
	1,100	2,000	1,130	19.3	Type B 360°
	1,200	2,100	1,150	19.3	Type B 360°
	1,300	2,200	1,180	19.3	Type B 360°
	1,400	2,300	1,200	19.3	Type B 360°
1,700	1,500	2,400	1,230	19.3	Type B 360°
	400	1,360	1,010	20.2	Type C
	450	1,410	1,020	20.2	Type C
	500	1,460	1,030	20.2	Type C
	600	1,560	1,060	20.2	Type B 360°
	700	1,660	1,080	20.2	Type B 360°
	800	1,760	1,110	20.2	Type B 360°
	900	1,860	1,130	20.2	Type B 360°
	1,000	1,960	1,160	20.2	Type B 360°
	1,100	2,060	1,180	20.2	Type B 360°
	1,200	2,160	1,210	20.2	Type B 360°
	1,300	2,260	1,230	20.2	Type B 360°
	1,400	2,360	1,260	20.2	Type B 360°
	1,500	2,460	1,280	20.2	Type B 360°

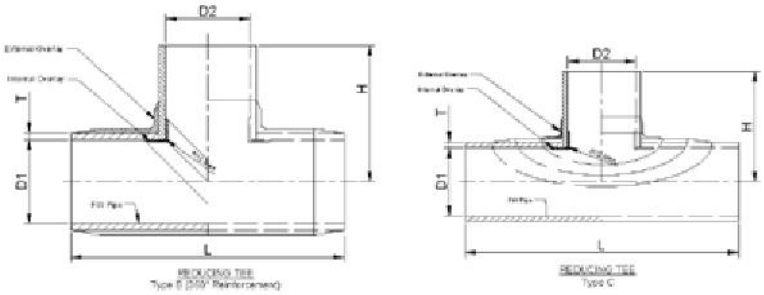

Dimension Table

Design Pressure: 3 Barg

Nominal Dia mm		L	H	Nominal wall thickness, T	Remark
D_1	D_2	mm	mm		
1,800	1,600	2,560	1,310	20.2	Type B 360°
	400	1,410	1,060	21.1	Type C
	450	1,460	1,070	21.1	Type C
	500	1,510	1,080	21.1	Type C
	600	1,610	1,110	21.1	Type C
	700	1,710	1,130	21.1	Type B 360°
	800	1,810	1,160	21.1	Type B 360°
	900	1,910	1,180	21.1	Type B 360°
	1,000	2,010	1,210	21.1	Type B 360°
	1,100	2,110	1,230	21.1	Type B 360°
	1,200	2,210	1,260	21.1	Type B 360°
	1,300	2,310	1,280	21.1	Type B 360°
	1,400	2,410	1,310	21.1	Type B 360°
	1,500	2,510	1,330	21.1	Type B 360°
	1,600	2,610	1,360	21.1	Type B 360°
	1,700	2,710	1,380	21.1	Type B 360°
1,900	400	1,460	1,110	22.0	Type C
	450	1,510	1,120	22.0	Type C
	500	1,560	1,130	22.0	Type C
	600	1,660	1,160	22.0	Type C
	700	1,760	1,180	22.0	Type B 360°
	800	1,860	1,210	22.0	Type B 360°
	900	1,960	1,230	22.0	Type B 360°
	1,000	2,060	1,260	22.0	Type B 360°
	1,100	2,160	1,280	22.0	Type B 360°
	1,200	2,260	1,310	22.0	Type B 360°
	1,300	2,360	1,330	22.0	Type B 360°
	1,400	2,460	1,360	22.0	Type B 360°

Nominal Dia mm		L	H	Nominal wall thickness, T	Remark
D_1	D_2	mm	mm		
1,900	1,500	2,560	1,380	22.0	Type B 360°
	1,600	2,660	1,410	22.0	Type B 360°
	1,700	2,760	1,430	22.0	Type B 360°
	1,800	2,860	1,460	22.0	Type B 360°
2,000	400	1,510	1,160	22.86	Type C
	450	1,560	1,170	22.86	Type C
	500	1,610	1,180	22.86	Type C
	600	1,710	1,210	22.86	Type C
	700	1,810	1,230	22.86	Type B 360°
	800	1,910	1,260	22.86	Type B 360°
	900	2,010	1,280	22.86	Type B 360°
	1,000	2,110	1,310	22.86	Type B 360°
	1,100	2,210	1,330	22.86	Type B 360°
	1,200	2,310	1,360	22.86	Type B 360°
	1,300	2,410	1,380	22.86	Type B 360°
	1,400	2,510	1,410	22.86	Type B 360°
	1,500	2,610	1,430	22.86	Type B 360°
	1,600	2,710	1,460	22.86	Type B 360°
	1,700	2,810	1,480	22.86	Type B 360°
	1,800	2,910	1,510	22.86	Type B 360°
	1,900	3,010	1,530	22.86	Type B 360°

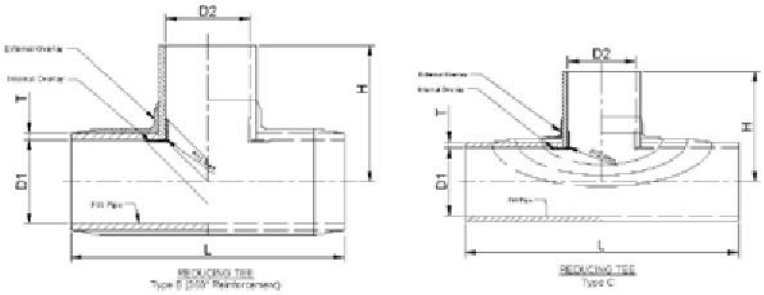

Dimension Table

Design Pressure: 3 Barg

Nominal Dia mm		L	H	Nominal wall thickness, T	Remark
D_1	D_2	mm	mm		
2,100	400	1,560	1210	23.76	Type C
	450	1,610	1220	23.76	Type C
	500	1,660	1230	23.76	Type C
	600	1,760	1260	23.76	Type C
	700	1,860	1280	23.76	Type C
	800	1,960	1310	23.76	Type B 360°
	900	2,060	1330	23.76	Type B 360°
	1,000	2,160	1360	23.76	Type B 360°
	1,100	2,260	1380	23.76	Type B 360°
	1,200	2,360	1410	23.76	Type B 360°
	1,300	2,460	1430	23.76	Type B 360°
	1,400	2,560	1460	23.76	Type B 360°
	1,500	2,660	1480	23.76	Type B 360°
	1,600	2,760	1510	23.76	Type B 360°
	1,700	2,860	1530	23.76	Type B 360°
	1,800	2,960	1560	23.76	Type B 360°
	1,900	3,060	1580	23.76	Type B 360°
	2,000	3,160	1610	23.76	Type B 360°
2,200	400	1,610	1260	24.84	Type C
	450	1,660	1270	24.84	Type C
	500	1,710	1280	24.84	Type C
	600	1,810	1310	24.84	Type C
	700	1,910	1330	24.84	Type C
	800	2,010	1360	24.84	Type B 360°
	900	2,110	1380	24.84	Type B 360°
	1,000	2,210	1410	24.84	Type B 360°
	1,100	2,310	1430	24.84	Type B 360°
	1,200	2,410	1460	24.84	Type B 360°
	1,300	2,510	1480	24.84	Type B 360°

Nominal Dia mm		L	H	Nominal wall thickness, T	Remark
D_1	D_2	mm	mm		
2,200	1,400	2,610	1,510	24.84	Type B 360°
	1,500	2,710	1,530	24.84	Type B 360°
	1,600	2,810	1,560	24.84	Type B 360°
	1,700	2,910	1,580	24.84	Type B 360°
	1,800	3,010	1,610	24.84	Type B 360°
	1,900	3,110	1,630	24.84	Type B 360°
	2,000	3,210	1,660	24.84	Type B 360°
	2,100	3,310	1,680	24.84	Type B 360°
2,300	400	1,670	1,310	25.74	Type C
	450	1,720	1,320	25.74	Type C
	500	1,770	1,340	25.74	Type C
	600	1,870	1,360	25.74	Type C
	700	1,970	1,390	25.74	Type C
	800	2,070	1,410	25.74	Type B 360°
	900	2,170	1,440	25.74	Type B 360°
	1,000	2,270	1,460	25.74	Type B 360°
	1,100	2,370	1,490	25.74	Type B 360°
	1,200	2,470	1,510	25.74	Type B 360°
	1,300	2,570	1,540	25.74	Type B 360°
	1,400	2,670	1,560	25.74	Type B 360°
	1,500	2,770	1,590	25.74	Type B 360°
	1,600	2,870	1,610	25.74	Type B 360°
	1,700	2,970	1,640	25.74	Type B 360°
	1,800	3,070	1,660	25.74	Type B 360°
	1,900	3,170	1,690	25.74	Type B 360°
	2,000	3,270	1,710	25.74	Type B 360°
	2,100	3,370	1,740	25.74	Type B 360°
	2,200	3,470	1,760	25.74	Type B 360°

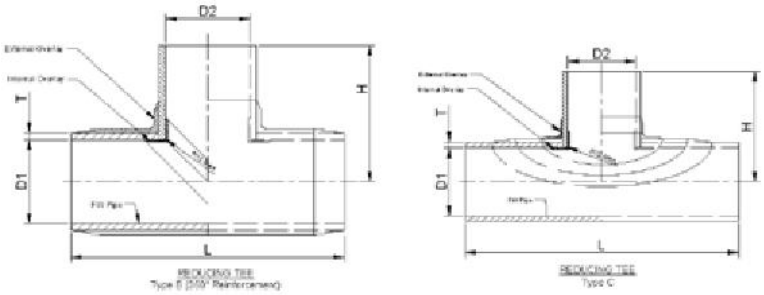

Dimension Table

Design Pressure: 3 Barg

Nominal Dia mm		L	H	Nominal wall thickness, T	Remark
D_1	D_2	mm	mm		
2,400	400	1,720	1,360	26.64	Type C
	450	1,770	1,370	26.64	Type C
	500	1,820	1,390	26.64	Type C
	600	1,920	1,410	26.64	Type C
	700	2,020	1,440	26.64	Type C
	800	2,120	1,460	26.64	Type C
	900	2,220	1,490	26.64	Type B 360°
	1,000	2,320	1,510	26.64	Type B 360°
	1,100	2,420	1,540	26.64	Type B 360°
	1,200	2,520	1,560	26.64	Type B 360°
	1,300	2,620	1,590	26.64	Type B 360°
	1,400	2,720	1,610	26.64	Type B 360°
	1,500	2,820	1,640	26.64	Type B 360°
	1,600	2,920	1,660	26.64	Type B 360°
	1,700	3,020	1,690	26.64	Type B 360°
	1,800	3,120	1,710	26.64	Type B 360°
	1,900	3,220	1,740	26.64	Type B 360°
	2,000	3,320	1,760	26.64	Type B 360°
	2,100	3,420	1,790	26.64	Type B 360°
	2,200	3,520	1,810	26.64	Type B 360°
	2,300	3,620	1,840	26.64	Type B 360°
2,500	400	1,770	1,410	27.54	Type C
	450	1,820	1,430	27.54	Type C
	500	1,870	1,440	27.54	Type C
	600	1,970	1,460	27.54	Type C
	700	2,070	1,490	27.54	Type C
	800	2,170	1,510	27.54	Type B 360°
	900	2,270	1,540	27.54	Type B 360°

Nominal Dia mm		L	H	Nominal wall thickness, T	Remark
D_1	D_2	mm	mm		
2,500	1,000	2,370	1,560	27.54	Type B 360°
	1,100	2,470	1,590	27.54	Type B 360°
	1,200	2,570	1,610	27.54	Type B 360°
	1,300	2,670	1,640	27.54	Type B 360°
	1,400	2,770	1,660	27.54	Type B 360°
	1,500	2,870	1,690	27.54	Type B 360°
	1,600	2,970	1,710	27.54	Type B 360°
	1,700	3,070	1,740	27.54	Type B 360°
	1,800	3,170	1,760	27.54	Type B 360°
	1,900	3,270	1,790	27.54	Type B 360°
	2,000	3,370	1,810	27.54	Type B 360°
	2,100	3,470	1,840	27.54	Type B 360°
	2,200	3,570	1,860	27.54	Type B 360°
	2,300	3,670	1,890	27.54	Type B 360°
	2,400	3,770	1,910	27.54	Type B 360°
2,600	400	1,820	1,460	28.44	Type C
	450	1,870	1,480	28.44	Type C
	500	1,920	1,490	28.44	Type C
	600	2,020	1,510	28.44	Type C
	700	2,120	1,540	28.44	Type C
	800	2,220	1,560	28.44	Type C
	900	2,320	1,590	28.44	Type C
	1,000	2,420	1,610	28.44	Type B 360°
	1,100	2,520	1,640	28.44	Type B 360°
	1,200	2,620	1,660	28.44	Type B 360°
	1,300	2,720	1,690	28.44	Type B 360°
	1,400	2,820	1,710	28.44	Type B 360°
	1,500	2,920	1,740	28.44	Type B 360°

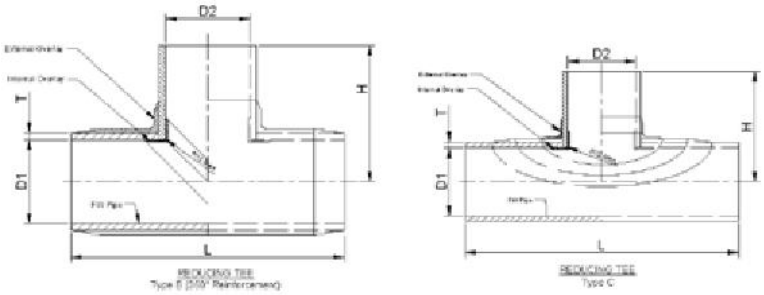

Dimension Table

Design Pressure: 3 Barg

Nominal Dia mm		L	H	Nominal wall thickness, T	Remark
D_1	D_2	mm	mm		
2,600	1,600	3,020	1,760	28.44	Type B 360°
	1,700	3,120	1,790	28.44	Type B 360°
	1,800	3,220	1,810	28.44	Type B 360°
	1,900	3,320	1,840	28.44	Type B 360°
	2,000	3,420	1,860	28.44	Type B 360°
	2,100	3,520	1,890	28.44	Type B 360°
	2,200	3,620	1,910	28.44	Type B 360°
	2,300	3,720	1,940	28.44	Type B 360°
	2,400	3,820	1,960	28.44	Type B 360°
	2,500	3,920	1,990	28.44	Type B 360°
2,700	400	1,880	1,520	29.52	Type C
	450	1,930	1,530	29.52	Type C
	500	1,980	1,540	29.52	Type C
	600	2,080	1,570	29.52	Type C
	700	2,180	1,590	29.52	Type C
	800	2,280	1,620	29.52	Type C
	900	2,380	1,640	29.52	Type C
	1,000	2,480	1,670	29.52	Type B 360°
	1,100	2,580	1,690	29.52	Type B 360°
	1,200	2,680	1,720	29.52	Type B 360°
	1,300	2,780	1,740	29.52	Type B 360°
	1,400	2,880	1,770	29.52	Type B 360°
	1,500	2,980	1,790	29.52	Type B 360°
	1,600	3,080	1,820	29.52	Type B 360°
	1,700	3,180	1,840	29.52	Type B 360°
	1,800	3,280	1,870	29.52	Type B 360°
	1,900	3,380	1,890	29.52	Type B 360°
	2,000	3,480	1,920	29.52	Type B 360°

Nominal Dia mm		L	H	Nominal wall thickness, T	Remark
D_1	D_2	mm	mm		
2,700	2,100	3,580	1,940	29.52	Type B 360°
	2,200	3,680	1,970	29.52	Type B 360°
	2,300	3,780	1,990	29.52	Type B 360°
	2,400	3,880	2,020	29.52	Type B 360°
	2,500	3,980	2,040	29.52	Type B 360°
	2,600	4,080	2,070	29.52	Type B 360°
2,800	400	1,930	1,570	30.42	Type C
	450	1,980	1,580	30.42	Type C
	500	2,030	1,590	30.42	Type C
	600	2,130	1,620	30.42	Type C
	700	2,230	1,640	30.42	Type C
	800	2,330	1,670	30.42	Type C
	900	2,430	1,690	30.42	Type C
	1,000	2,530	1,720	30.42	Type B 360°
	1,100	2,630	1,740	30.42	Type B 360°
	1,200	2,730	1,770	30.42	Type B 360°
	1,300	2,830	1,790	30.42	Type B 360°
	1,400	2,930	1,820	30.42	Type B 360°
	1,500	3,030	1,840	30.42	Type B 360°
	1,600	3,130	1,870	30.42	Type B 360°
	1,700	3,230	1,890	30.42	Type B 360°
	1,800	3,330	1,920	30.42	Type B 360°
	1,900	3,430	1,940	30.42	Type B 360°
	2,000	3,530	1,970	30.42	Type B 360°
	2,100	3,630	1,990	30.42	Type B 360°
	2,200	3,730	2,020	30.42	Type B 360°
	2,300	3,830	2,040	30.42	Type B 360°
	2,400	3,930	2,070	30.42	Type B 360°

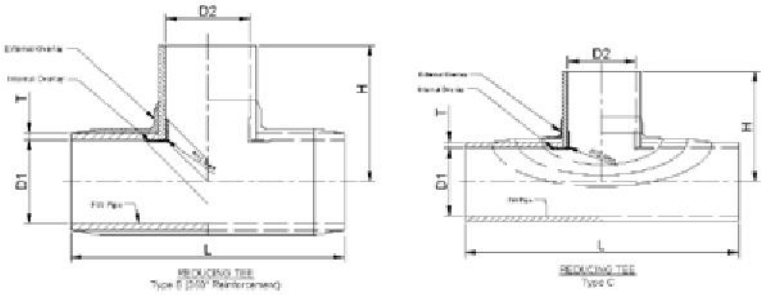

Dimension Table

Design Pressure: 3 Barg

Nominal Dia mm		L	H	Nominal wall thickness, T	Remark
D_1	D_2	mm	mm		
2,800	2,500	4,030	2,090	30.42	Type B 360°
	2,600	4,130	2,120	30.42	Type B 360°
	2,700	4,230	2,140	30.42	Type B 360°
2,900	400	1,980	1,620	31.32	Type C
	450	2,030	1,630	31.32	Type C
	500	2,080	1,640	31.32	Type C
	600	2,180	1,670	31.32	Type C
	700	2,280	1,690	31.32	Type C
	800	2,380	1,720	31.32	Type C
	900	2,480	1,740	31.32	Type C
	1,000	2,580	1,770	31.32	Type C
	1,100	2,680	1,790	31.32	Type B 360°
	1,200	2,780	1,820	31.32	Type B 360°
	1,300	2,880	1,840	31.32	Type B 360°
	1,400	2,980	1,870	31.32	Type B 360°
	1,500	3,080	1,890	31.32	Type B 360°
	1,600	3,180	1,920	31.32	Type B 360°
	1,700	3,280	1,940	31.32	Type B 360°
	1,800	3,380	1,970	31.32	Type B 360°
	1,900	3,480	1,990	31.32	Type B 360°
	2,000	3,580	2,020	31.32	Type B 360°
	2,100	3,680	2,040	31.32	Type B 360°
	2,200	3,780	2,070	31.32	Type B 360°
	2,300	3,880	2,090	31.32	Type B 360°
	2,400	3,980	2,120	31.32	Type B 360°
	2,500	4,080	2,140	31.32	Type B 360°
	2,600	4,180	2,170	31.32	Type B 360°
	2,700	4,280	2,190	31.32	Type B 360°

Nominal Dia mm		L	H	Nominal wall thickness, T	Remark
D_1	D_2	mm	mm		
2,900	2,800	4,380	2,220	31.32	Type B 360°
3,000	400	2,030	1,670	32.22	Type C
	450	2,080	1,680	32.22	Type C
	500	2,130	1,690	32.22	Type C
	600	2,230	1,720	32.22	Type C
	700	2,330	1,740	32.22	Type C
	800	2,430	1,770	32.22	Type C
	900	2,530	1,790	32.22	Type C
	1,000	2,630	1,820	32.22	Type C
	1,100	2,730	1,840	32.22	Type B 360°
	1,200	2,830	1,870	32.22	Type B 360°
	1,300	2,930	1,890	32.22	Type B 360°
	1,400	3,030	1,920	32.22	Type B 360°
	1,500	3,130	1,940	32.22	Type B 360°
	1,600	3,230	1,970	32.22	Type B 360°
	1,700	3,330	1,990	32.22	Type B 360°
	1,800	3,430	2,020	32.22	Type B 360°
	1,900	3,530	2,040	32.22	Type B 360°
	2,000	3,630	2,070	32.22	Type B 360°
	2,100	3,730	2,090	32.22	Type B 360°
	2,200	3,830	2,120	32.22	Type B 360°
	2,300	3,930	2,140	32.22	Type B 360°
	2,400	4,030	2,170	32.22	Type B 360°
	2,500	4,130	2,190	32.22	Type B 360°
	2,600	4,230	2,220	32.22	Type B 360°
	2,700	4,330	2,240	32.22	Type B 360°
	2,800	4,430	2,270	32.22	Type B 360°
	2,900	4,530	2,290	32.22	Type B 360°

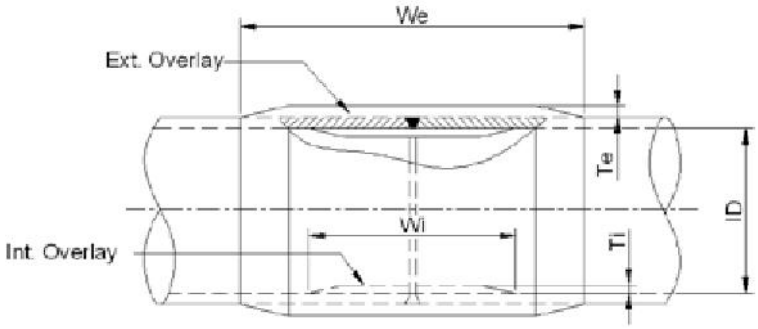

NOMINAL PIPE SIZE, ID		PN 3				PN 4			
		EXTERNAL OVERLAY		INTERNAL OVERLAY		EXTERNAL OVERLAY		INTERNAL OVERLAY	
		Te	We	Ti	Wi	Te	We	Ti	Wi
(mm)	(inch)	Thickness (mm)	Width (mm)	Thickness (mm)	Width (mm)	Thickness (mm)	Width (mm)	Thickness (mm)	Width (mm)
25	1	4.5	150	-	-	4.5	150	-	-
50	2	4.5	150	-	-	4.5	150	-	-
80	3	4.5	150	-	-	4.5	150	-	-
100	4	4.5	150	-	-	4.5	150	-	-
125	5	4.5	150	-	-	4.5	150	-	-
150	6	4.5	150	-	-	4.5	150	-	-
200	8	4.5	150	-	-	4.5	150	-	-
250	10	4.5	150	-	-	5.3	150	-	-
300	12	4.5	150	-	-	5.3	150	-	-
350	14	5.3	175	-	-	5.3	175	-	-
400	16	5.3	200	-	-	6.3	200	-	-
450	18	5.3	225	-	-	6.3	225	-	-
500	20	6.3	250	-	-	8.1	250	-	-
600	24	6.3	300	2.1	150	8.1	300	2.1	150
650	26	6.3	325	2.1	200	9.8	325	2.1	200
700	28	8.1	350	2.1	200	9.8	350	2.1	200
750	30	8.1	375	2.1	200	11.6	375	2.1	200
800	32	8.1	400	2.1	200	11.6	400	2.1	200
900	36	9.8	450	2.1	250	12.6	450	2.1	250
1,000	40	11.6	500	2.1	250	14.4	500	2.1	250
1,050	42	11.6	525	3.6	300	14.4	525	3.6	300

B&W JOINT

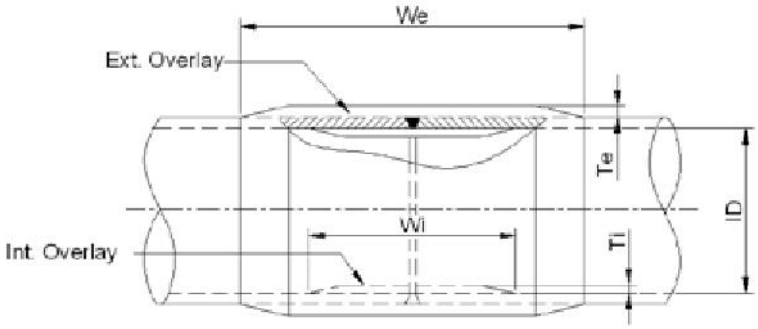

NOMINAL PIPE SIZE, ID		PN 3				PN 4			
		EXTERNAL OVERLAY		INTERNAL OVERLAY		EXTERNAL OVERLAY		INTERNAL OVERLAY	
		Te	We	Ti	Wi	Te	We	Ti	Wi
(mm)	(inch)	Thickness (mm)	Width (mm)	Thickness (mm)	Width (mm)	Thickness (mm)	Width (mm)	Thickness (mm)	Width (mm)
1,100	44	11.6	550	3.6	300	14.4	550	3.6	300
1,200	48	12.6	600	3.6	300	16.1	600	3.6	300
1,300	52	12.6	650	3.6	350	17.9	650	3.6	350
1,350	54	14.4	675	3.6	350	17.9	675	3.6	350
1,400	56	14.4	700	3.6	350	18.9	700	3.6	350
1,500	60	16.1	750	5.0	400	20.7	750	5.0	400
1,600	64	16.1	800	5.0	400	20.7	800	5.0	400
1,700	68	17.9	850	5.0	450	22.4	850	5.0	450
1,800	72	17.9	900	5.0	450	24.2	900	5.0	450
1,900	76	18.9	950	5.0	500	25.2	950	5.0	500
2,000	80	20.7	1,000	5.0	500	27.0	1,000	5.0	500
2,100	84	20.7	1,050	5.0	550	28.7	1,050	5.0	550
2,200	88	22.4	1,100	6.5	550	28.7	1,100	6.5	550
2,300	92	22.4	1,150	6.5	600	30.5	1,150	6.5	600
2,400	96	24.2	1,200	6.5	600	31.5	1,200	6.5	600
2,500	100	25.2	1,250	6.5	650	33.3	1,250	6.5	650
2,600	104	25.2	1,300	6.5	650	35.0	1,300	6.5	650
2,700	108	27.0	1,350	6.5	650	35.0	1,350	6.5	700
2,800	112	28.7	1,400	6.5	700	36.8	1,400	6.5	700
2,900	116	28.7	1,450	6.5	750	37.8	1,450	6.5	750
3,000	120	30.5	1,500	6.5	750	39.6	1,500	6.5	750

B&W JOINT

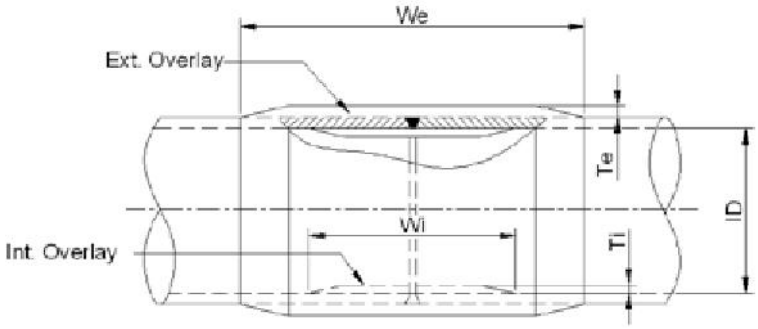

NOMINAL PIPE SIZE, ID		PN 5				PN 6			
		EXTERNAL OVERLAY		INTERNAL OVERLAY		EXTERNAL OVERLAY		INTERNAL OVERLAY	
		Te	We	Ti	Wi	Te	We	Ti	Wi
(mm)	(inch)	Thickness (mm)	Width (mm)	Thickness (mm)	Width (mm)	Thickness (mm)	Width (mm)	Thickness (mm)	Width (mm)
25	1	4.5	150	-	-	4.5	150	-	-
50	2	4.5	150	-	-	4.5	150	-	-
80	3	4.5	150	-	-	4.5	150	-	-
100	4	4.5	150	-	-	4.5	150	-	-
125	5	4.5	150	-	-	4.5	150	-	-
150	6	4.5	150	-	-	4.5	150	-	-
200	8	5.3	150	-	-	5.3	150	-	-
250	10	5.3	150	-	-	6.3	150	-	-
300	12	6.3	150	-	-	6.3	150	-	-
350	14	6.3	175	-	-	8.1	207	-	-
400	16	8.1	207	-	-	8.1	207	-	-
450	18	8.1	225	-	-	9.8	225	-	-
500	20	9.8	250	-	-	11.6	250	-	-
600	24	9.8	300	2.1	150	12.6	300	2.1	150
650	26	11.6	325	2.1	200	12.6	325	2.1	200
700	28	12.6	350	2.1	200	14.4	350	2.1	200
750	30	12.6	375	2.1	200	16.1	375	2.1	200
800	32	14.4	400	2.1	200	16.1	400	2.1	200
900	36	16.1	450	2.1	250	17.9	450	2.1	250
1,000	40	17.9	500	2.1	250	20.7	500	2.1	250
1,050	42	17.9	525	3.6	300	20.7	525	3.6	300

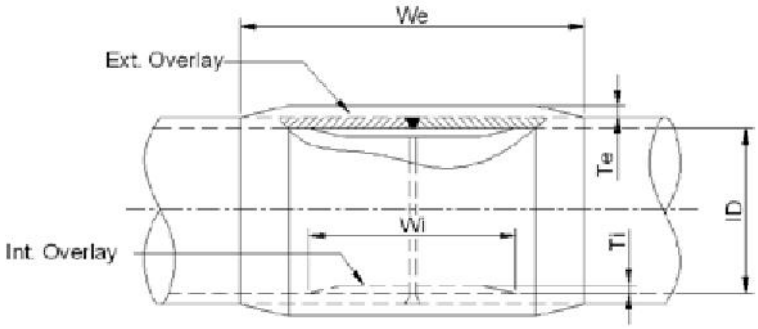

NOMINAL PIPE SIZE, ID		PN 5				PN 6			
		EXTERNAL OVERLAY		INTERNAL OVERLAY		EXTERNAL OVERLAY		INTERNAL OVERLAY	
		Te	We	Ti	Wi	Te	We	Ti	Wi
(mm)	(inch)	Thickness (mm)	Width (mm)	Thickness (mm)	Width (mm)	Thickness (mm)	Width (mm)	Thickness (mm)	Width (mm)
1,100	44	18.9	550	3.6	300	22.4	550	3.6	300
1,200	48	20.7	600	3.6	300	24.2	600	3.6	300
1,300	52	22.4	650	3.6	350	25.2	650	3.6	350
1,350	54	22.4	675	3.6	350	27.0	675	3.6	350
1,400	56	24.2	700	3.6	350	28.7	700	3.6	350
1,500	60	25.2	750	5.0	400	30.5	750	5.0	400
1,600	64	27.0	800	5.0	400	31.5	800	5.0	400
1,700	68	28.7	850	5.0	450	33.3	850	5.0	450
1,800	72	30.5	900	5.0	450	35.0	900	5.0	450
1,900	76	31.5	950	5.0	500	37.8	950	5.0	500
2,000	80	33.3	1,000	5.0	500	39.6	1,000	5.0	500
2,100	84	35.0	1,050	5.0	550	41.3	1,050	5.0	550
2,200	88	36.8	1,100	6.5	550	43.1	1,100	6.5	550
2,300	92	37.8	1,150	6.5	600	44.1	1,150	6.5	600
2,400	96	39.6	1,200	6.5	600	47.6	1,200	6.5	600
2,500	100	41.3	1,250	6.5	650	49.4	1,250	6.5	650
2,600	104	43.1	1,300	6.5	650	50.4	1,300	6.5	650
2,700	108	44.1	1,350	6.5	700	52.2	1,350	6.5	700
2,800	112	45.9	1,400	6.5	700	55.7	1,400	6.5	700
2,900	116	47.6	1,450	6.5	750	56.7	1,450	6.5	750
3,000	120	49.4	1,500	6.5	750	58.5	1,500	6.5	750

B&W JOINT

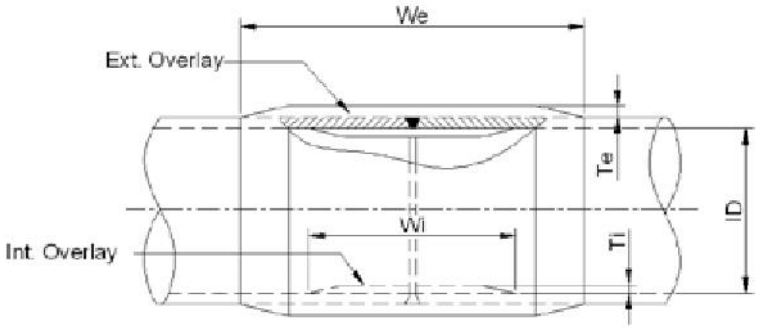

NOMINAL PIPE SIZE, ID		PN 7				PN 8			
		EXTERNAL OVERLAY		INTERNAL OVERLAY		EXTERNAL OVERLAY		INTERNAL OVERLAY	
		Te	We	Ti	Wi	Te	We	Ti	Wi
(mm)	(inch)	Thickness (mm)	Widht (mm)	Thickness (mm)	Width (mm)	Thickness (mm)	Width (mm)	Thickness (mm)	Width (mm)
25	1	4.5	150	-	-	4.5	150	-	-
50	2	4.5	150	-	-	4.5	150	-	-
80	3	4.5	150	-	-	4.5	150	-	-
100	4	4.5	150	-	-	4.5	150	-	-
125	5	4.5	150	-	-	5.3	150	-	-
150	6	5.3	150	-	-	5.3	150	-	-
200	8	5.3	150	-	-	6.3	150	-	-
250	10	6.3	150	-	-	8.1	207	-	-
300	12	8.1	207	-	-	8.1	207	-	-
350	14	8.1	207	-	-	9.8	207	-	-
400	16	9.8	207	-	-	11.6	233	-	-
450	18	11.6	233	-	-	12.6	233	-	-
500	20	12.6	250	-	-	14.4	302	-	-
600	24	14.4	302	2.1	150	16.1	302	2.1	150
650	26	16.1	325	2.1	200	17.9	371	2.1	200
700	28	16.1	350	2.1	200	18.9	371	2.1	200
750	30	17.9	375	2.1	200	20.7	441	2.1	200
800	32	18.9	400	2.1	200	20.7	441	2.1	200
900	36	20.7	450	2.1	250	24.2	466	2.1	250
1,000	40	24.2	500	2.1	250	27.0	535	2.1	250
1,050	42	24.2	525	3.6	300	28.7	535	3.6	300

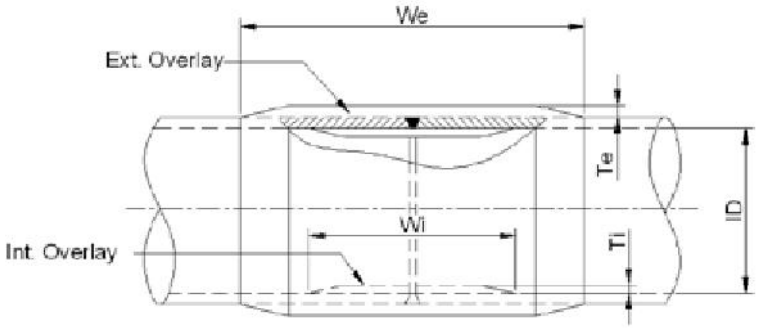

NOMINAL PIPE SIZE, ID		PN 7				PN 8			
		EXTERNAL OVERLAY		INTERNAL OVERLAY		EXTERNAL OVERLAY		INTERNAL OVERLAY	
		Te	We	Ti	Wi	Te	We	Ti	Wi
(mm)	(inch)	Thickness (mm)	Width (mm)	Thickness (mm)	Width (mm)	Thickness (mm)	Width (mm)	Thickness (mm)	Width (mm)
1,100	44	25.2	550	3.6	300	28.7	550	3.6	300
1,200	48	28.7	600	3.6	300	31.5	605	3.6	300
1,300	52	30.5	650	3.6	350	35.0	674	3.6	350
1,350	54	31.5	675	3.6	350	35.0	675	3.6	350
1,400	56	31.5	700	3.6	350	36.8	700	3.6	350
1,500	60	35.0	750	5.0	400	39.6	769	5.0	400
1,600	64	36.8	800	5.0	400	41.3	800	5.0	400
1,700	68	39.6	850	5.0	450	44.1	850	5.0	450
1,800	72	41.3	900	5.0	450	47.6	907	5.0	450
1,900	76	43.1	950	5.0	500	49.4	950	5.0	500
2,000	80	45.9	1,000	5.0	500	52.2	1,002	5.0	500
2,100	84	47.6	1,050	5.0	550	55.7	1,071	5.0	550
2,200	88	50.4	1,100	6.5	550	56.7	1,100	6.5	550
2,300	92	52.2	1,150	6.5	600	60.2	1,150	6.5	600
2,400	96	55.7	1,200	6.5	600	62.0	1,200	6.5	600
2,500	100	56.7	1,250	6.5	650	64.8	1,250	6.5	650
2,600	104	58.5	1,300	6.5	650	68.3	1,304	6.5	650
2,700	108	62.0	1,350	6.5	700	69.3	1,350	6.5	700
2,800	112	63.0	1,400	6.5	700	72.8	1,400	6.5	700
2,900	116	66.5	1,450	6.5	750	74.6	1,450	6.5	750
3,000	120	68.3	1,500	6.5	750	77.4	1,500	6.5	750

B&W JOINT

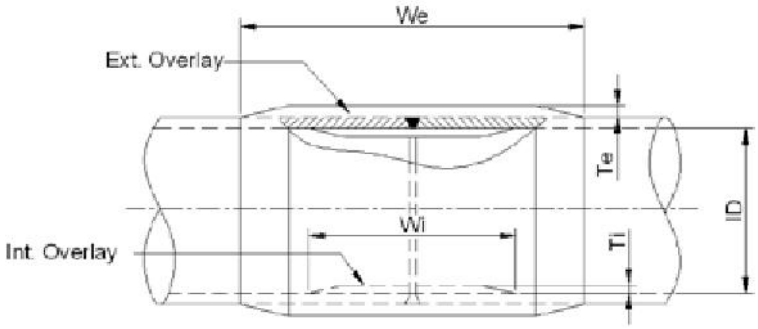

NOMINAL PIPE SIZE, ID		PN 9				PN 10			
		EXTERNAL OVERLAY		INTERNAL OVERLAY		EXTERNAL OVERLAY		INTERNAL OVERLAY	
		Te	We	Ti	Wi	Te	We	Ti	Wi
(mm)	(inch)	Thickness (mm)	Widht (mm)	Thickness (mm)	Widht (mm)	Thickness (mm)	Widht (mm)	Thickness (mm)	Widht (mm)
25	1	4.5	150	-	-	4.5	150	-	-
50	2	4.5	150	-	-	4.5	150	-	-
80	3	4.5	150	-	-	4.5	150	-	-
100	4	4.5	150	-	-	5.3	150	-	-
125	5	5.3	150	-	-	5.3	150	-	-
150	6	5.3	150	-	-	6.3	150	-	-
200	8	6.3	150	-	-	8.1	207	-	-
250	10	8.1	207	-	-	9.8	207	-	-
300	12	9.8	207	-	-	11.6	233	-	-
350	14	11.6	233	-	-	12.6	233	-	-
400	16	12.6	233	-	-	14.4	302	-	-
450	18	14.4	302	-	-	16.1	302	-	-
500	20	16.1	302	-	-	17.9	371	-	-
600	24	17.9	371	2.1	200	20.7	441	2.1	250
650	26	18.9	371	2.1	200	22.4	441	2.1	250
700	28	20.7	441	2.1	250	24.2	466	2.1	250
750	30	22.4	441	2.1	250	25.2	466	2.1	250
800	32	24.2	466	2.1	250	27.0	535	2.1	300
900	36	27.0	535	2.1	300	30.5	605	2.1	350
1,000	40	30.5	605	2.1	350	33.3	674	2.1	350
1,050	42	31.5	605	3.6	350	35.0	674	3.6	350

B&W JOINT

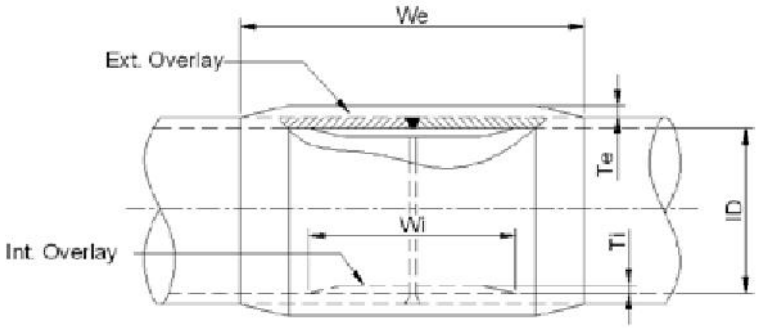

NOMINAL PIPE SIZE, ID		PN 9				PN 10			
		EXTERNAL OVERLAY		INTERNAL OVERLAY		EXTERNAL OVERLAY		INTERNAL OVERLAY	
		Te	We	Ti	Wi	Te	We	Ti	Wi
(mm)	(inch)	Thickness (mm)	Width (mm)	Thickness (mm)	Width (mm)	Thickness (mm)	Width (mm)	Thickness (mm)	Width (mm)
1,100	44	33.3	674	3.6	350	36.8	699	3.6	350
1,200	48	35.0	674	3.6	350	39.6	769	3.6	400
1,300	52	37.8	699	3.6	350	43.1	838	3.6	450
1,350	54	39.6	769	3.6	400	44.1	838	3.6	450
1,400	56	41.3	769	3.6	400	45.9	907	3.6	500
1,500	60	44.1	838	5.0	450	49.4	933	5.0	500
1,600	64	47.6	907	5.0	500	52.2	1,002	5.0	550
1,700	68	49.4	933	5.0	500	55.7	1,071	5.0	550
1,800	72	52.2	1,002	5.0	550	58.5	1,140	5.0	600
1,900	76	55.7	1,071	5.0	550	62.0	1,166	5.0	600
2,000	80	58.5	1,140	5.0	600	64.8	1,235	5.0	650
2,100	84	62.0	1,166	5.0	600	68.3	1,304	5.0	700
2,200	88	64.8	1,235	6.5	650	71.1	1,373	6.5	700
2,300	92	66.5	1,235	6.5	650	74.6	1,399	6.5	700
2,400	96	69.3	1,304	6.5	700	77.4	1,468	6.5	750
2,500	100	72.8	1,373	6.5	700	80.9	1,537	6.5	800
2,600	104	75.6	1,399	6.5	700	83.7	1,606	6.5	850
2,700	108	79.1	1,468	6.5	750	87.2	1,632	6.5	850
2,800	112	81.9	1,537	6.5	800	90.0	1,701	6.5	900
2,900	116	83.7	1,606	6.5	850	93.5	1,770	6.5	900
3,000	120	87.2	1,632	6.5	850	96.3	1,839	6.5	950

ASME B16.5 CL#150FF

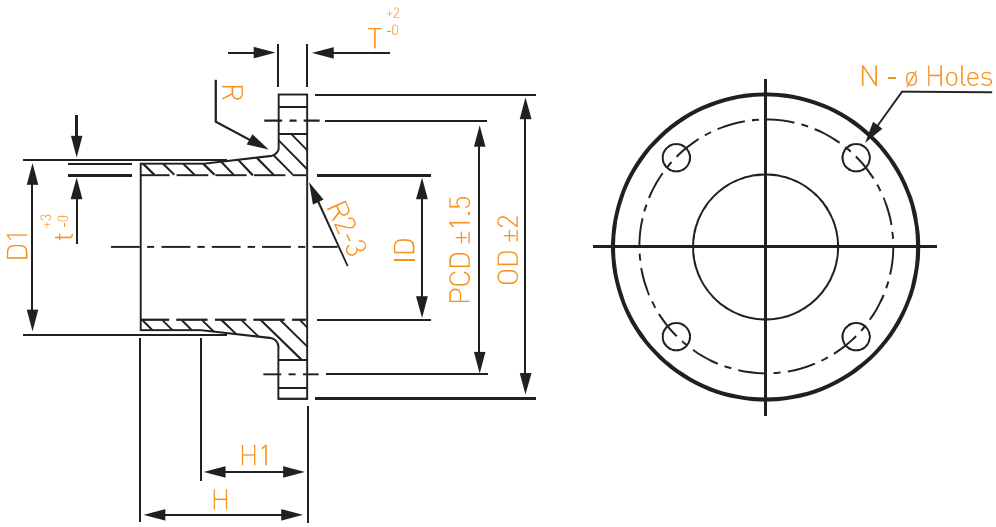

Dimension Table

According to ASME B16.5 CL#150FF

Nominal Diameter		Flange Data				Hub Data			Drilling Data			Radius
		ID	OD	T	H	H1	D1	t min	N	PCD	ø h	R
mm	inch	mm	mm	mm	mm	mm	mm	mm	holes	mm	mm	mm
15	1/2	15	90.0	18	150	72	33	4.3	4	60.3	15.9	3
20	3/4	20	100.0	20	150	80	40	4.3	4	69.9	15.9	3
25	1	25	110.0	20	150	80	45	4.3	4	79.4	15.9	3
40	1 1/2	40	125.0	20	150	80	60	4.3	4	98.4	15.9	6.4
50	2	50	150.0	24	150	96	74	4.3	4	120.7	19.1	7.9
65	2 1/2	65	180.0	24	150	96	89	4.3	4	139.7	19.1	7.9
80	3	80	190.0	26	150	104	106	4.3	4	152.4	19.1	9.7
100	4	100	230.0	28	200	112	128	4.3	8	190.5	19.1	11.2
125	5	125	255.0	32	200	128	157	4.5	8	215.9	22.2	11.2
150	6	150	280.0	32	200	128	182	5.0	8	241.3	22.2	12.7
200	8	200	345.0	34	200	136	234	5.8	8	298.5	22.2	12.7
250	10	250	405.0	36	250	144	286	6.7	12	362.0	25.4	12.7
300	12	300	485.0	36	250	144	336	7.6	12	431.8	25.4	12.7
350	14	350	535.0	38	275	152	388	8.5	12	476.3	28.6	12.7
400	16	400	595.0	42	300	168	442	9.3	16	539.8	28.6	12.7
450	18	450	635.0	42	325	168	492	10.2	16	577.9	31.8	12.7
500	20	500	700.0	43	350	172	543	11.1	20	635.0	31.8	12.7
600	24	600	815.0	48	400	192	648	12.8	20	749.3	34.9	12.7

ASME B16.47 SERIES A CL#150FF

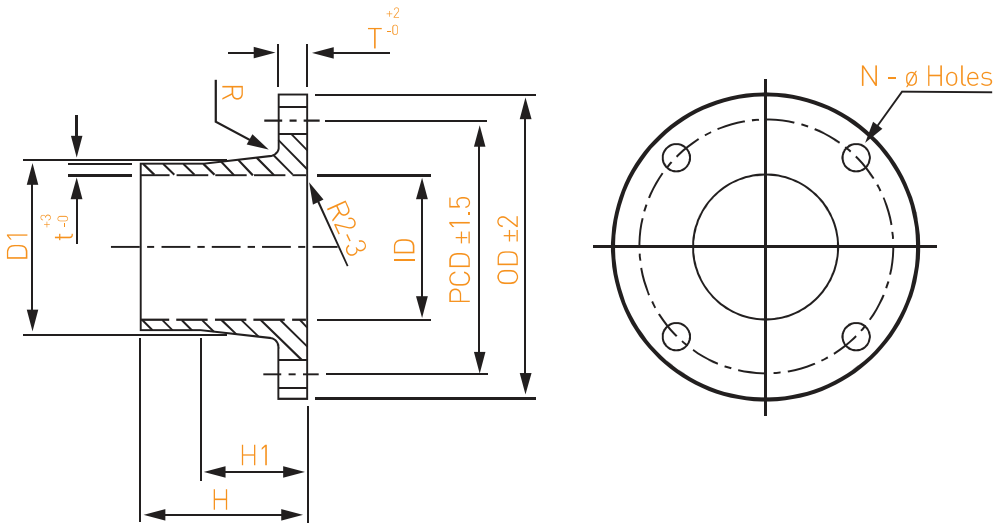

Dimension Table

According to ASME B16.47 SERIES A CL#150FF

Nominal Diameter		Flange Data				Hub Data			Drilling Data			Radius
		ID	OD	T	H	H1	D1	t min	N	PCD	ø h	R
mm	inch	mm	mm	mm	mm	mm	mm	mm	holes	mm	mm	mm
650	26	650	870.0	68	400	272	718	13.7	24	806.4	34.9	9.65
700	28	700	925.0	71	450	284	771	14.6	28	863.6	34.9	11.18
750	30	750	985.0	75	450	300	825	15.5	28	914.4	34.9	11.18
800	32	800	1.060.0	81	500	324	881	16.3	28	977.7	41.3	11.18
850	34	850	1,110,0	83	550	332	933	17.2	32	1,028.7	41.3	12.7
900	36	900	1,170.0	85	550	340	985	18.1	32	1,085.8	41.3	12.7
950	38	950	1,240.0	87	600	348	1,037	19.0	32	1,149.4	41.3	12.7
1,000	40	1,000	1,290.0	90	700	360	1,090	19.8	36	1,200.2	41.3	12.7
1,050	42	1,050	1,345.0	97	750	388	1,147	20.7	36	1,257.3	41.3	12.7
1,100	44	1,100	1,405.0	102	750	408	1,202	21.6	40	1,314.4	41.3	12.7
1,150	46	1,150	1,455.0	103	750	412	1,253	22.5	40	1,365.2	41.3	12.7
1,200	48	1,200	1,510.0	108	750	432	1,308	23.3	44	1,422.4	41.3	12.7
1,250	50	1,250	1,570.0	111	800	444	1,361	24.2	44	1,479.6	47.6	12.7
1,300	52	1,300	1,625.0	116	800	464	1,416	25.1	44	1,536.7	47.6	12.7
1,350	54	1,350	1,685.0	121	800	484	1,471	25.9	44	1,593.8	47.6	12.7
1,400	56	1,400	1,745.0	124	850	496	1,524	26.8	48	1,651.0	47.6	12.7
1,450	58	1,450	1,805.0	129	850	516	1,579	27.7	48	1,708.2	47.6	12.7
1,500	60	1,500	1.855.0	132	850	528	1,632	28.6	52	1,759.0	47.6	12.7

AWWA C207 D

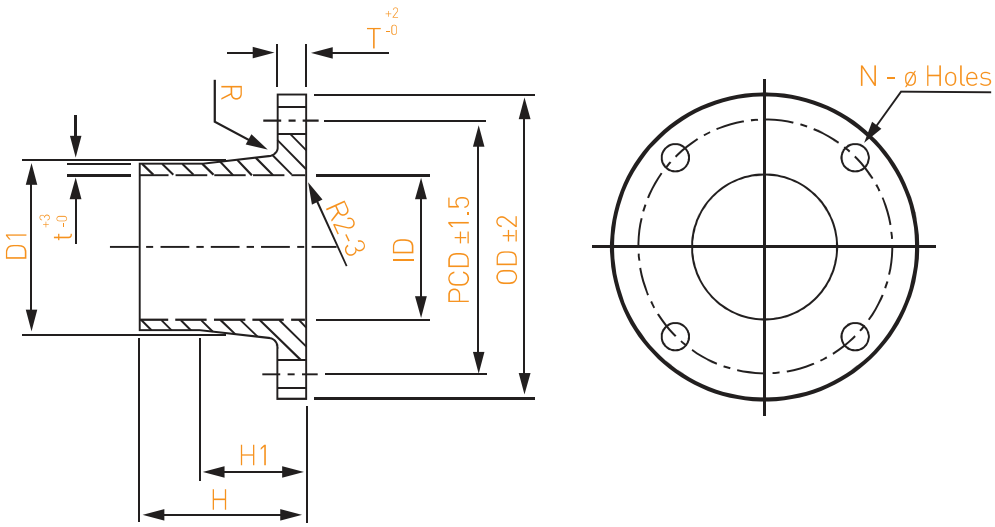

Dimension Table

According to AWWA C207 D

Nominal Diameter		Flange Data				Hub Data			Drilling Data			Radius
		ID	OD	T	H	H1	D1	t min	N	PCD	ø h	R
mm	inch	mm	mm	mm	mm	mm	mm	mm	holes	mm	mm	mm
100	4	100	228.6	28.0	200	112	128	4.3	8	190.5	19.05	11.18
125	5	125	254.0	32.0	200	128	157	4.5	8	215.9	22.225	11.18
150	6	150	279.4	32.0	200	128	182	5.0	8	241.3	22.225	11.18
200	8	200	342.9	34.0	200	136	234	5.8	8	298.5	22.225	11.18
250	10	250	406.4	36.0	250	144	286	6.7	12	362.0	25.4	11.18
300	12	300	482.6	36.0	250	144	336	7.6	12	431.8	25.4	11.18
350	14	350	533.4	38.0	275	152	388	8.5	12	476.3	28.575	11.18
400	16	400	596.9	42.0	300	168	442	9.3	16	539.8	28.575	11.18
450	18	450	635.0	42.0	325	168	492	10.2	16	577.9	31.75	11.18
500	20	500	698.5	43.0	350	172	543	11.1	20	635.0	31.75	11.18
550	22	550	749.3	46.0	375	184	596	12.0	20	692.2	34.925	11.18
600	24	600	812.8	48.0	400	192	648	12.8	20	749.3	34.925	11.18
650	26	650	870.0	68.0	400	272	718	13.7	24	806.5	34.925	11.18
700	28	700	927.1	71.0	450	284	771	14.6	28	863.6	34.925	11.18
750	30	750	984.3	75.0	450	300	825	15.5	28	914.4	34.925	11.18
800	32	800	1060.5	81.0	500	324	881	16.3	28	977.9	41.275	11.18
850	34	850	1111.3	83.0	550	332	933	18.1	32	1028.7	41.275	12.7
900	36	900	1168.4	85.0	550	340	985	18.1	32	1085.9	41.275	12.7
950	38	950	1238.3	87.0	600	348	1,037	19.8	32	1149.4	41.275	12.7
1000	40	1,000	1289.1	90.0	700	360	1,090	19.8	36	1200.2	41.275	12.7

AWWA C207 D

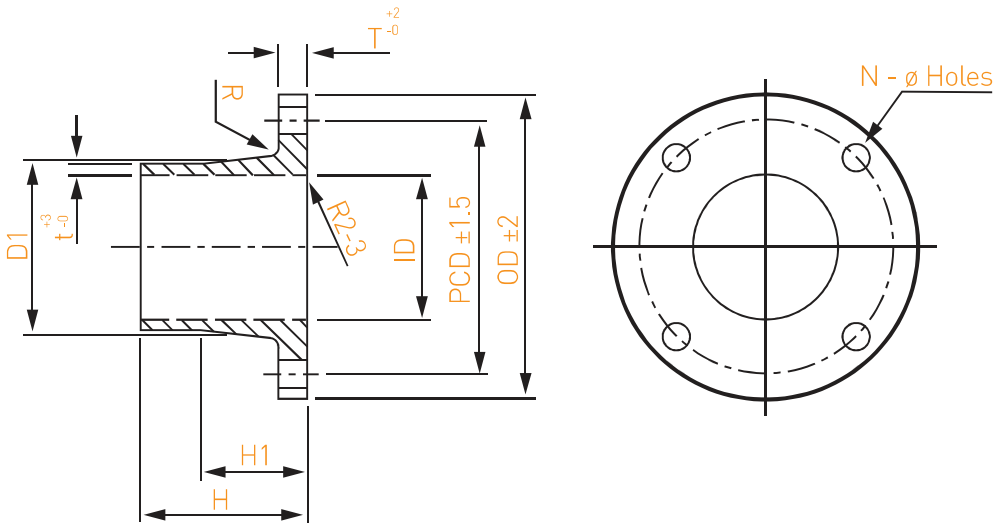

Dimension Table

According to AWWA C207 D

Nominal Diameter		Flange Data				Hub Data			Drilling Data			Radius
		ID	OD	T	H	H1	D1	t min	N	PCD	ø h	R
mm	inch	mm	mm	mm	mm	mm	mm	mm	holes	mm	mm	mm
1,050	42	1,050	1346.2	97.0	750	388	1,147	20.7	36	1257.3	41.275	12.7
1,100	44	1,100	1403.4	102.0	750	408	1,202	21.6	40	1314.5	41.275	12.7
1,150	46	1,150	1454.2	103.0	750	412	1,253	23.3	40	1365.3	41.275	12.7
1,200	48	1,200	1511.3	108.0	750	432	1,308	23.3	44	1422.4	41.275	12.7
1,250	50	1,250	1568.5	111.0	800	444	1,361	25.1	44	1479.6	47.625	12.7
1,300	52	1,300	1625.6	116.0	800	464	1,416	25.1	44	1536.7	47.625	12.7
1,350	54	1,350	1682.8	121.0	800	484	1,471	25.9	44	1593.9	47.625	12.7
1,500	60	1,500	1854.2	132.0	850	528	1,632	28.6	52	1759.0	47.625	12.7
1,650	66	1,650	2032.0	145	900	580	1,795	31.2	52	1930.4	47.6	12.7
1,800	72	1,800	2197.1	157	950	628	1,957	33.8	60	2095.5	47.6	12.7
1,950	78	1,950	2362.2	170	1,000	680	2,120	36.5	64	2260.6	53.98	12.7
2,100	84	2,100	2533.65	182	1,050	728	2,282	39.1	64	2425.7	53.98	12.7
2,250	90	2,250	2705.10	195	1,100	780	2,445	41.7	68	2590.8	60.33	12.7
2,400	96	2,400	2876.55	207	1,150	828	2,607	44.3	68	2755.9	60.33	12.7

JIS 5K

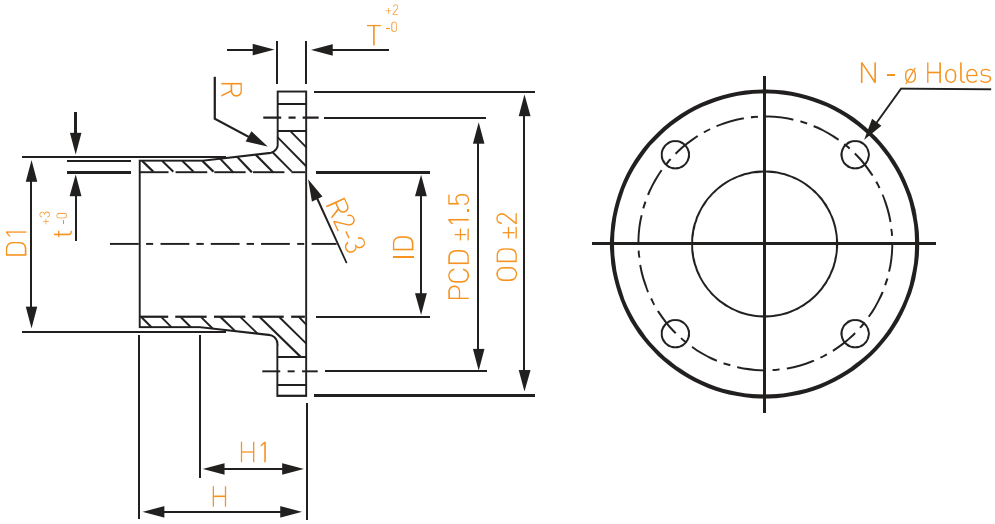

Dimension Table

According to JIS 5K

Nominal Diameter		Flange Data				Hub Data			Drilling Data			Radius
		ID	OD	T	H	H1	D1	t min	N	PCD	ø h	R
mm	inch	mm	mm	mm	mm	mm	mm	mm	holes	mm	mm	mm
20	3/4	20	85	10	200	40	30	5.0	4	65	12.0	12.7
25	1	25	95	10	200	40	35	5.0	4	75	12.0	12.7
40	1 1/2	40	120	12	200	48	52	5.0	4	95	15.0	12.7
50	2	50	130	14	200	56	64	5.0	4	105	15.0	12.7
65	2 1/2	65	155	14	200	56	79	5.0	4	130	15.0	12.7
80	3	80	180	14	200	56	94	6.0	4	145	19.0	12.7
100	4	100	200	16	200	64	116	6.0	8	165	19.0	12.7
125	5	125	235	16	230	64	141	6.0	8	200	19.0	12.7
150	6	150	265	18	230	72	168	6.0	8	230	19.0	12.7
200	8	200	320	20	230	80	220	8.0	8	280	23.0	12.7
250	10	250	385	22	230	88	272	8.0	12	345	23.0	12.7
300	12	300	430	22	230	88	322	8.0	12	390	23.0	12.7
350	14	350	480	24	230	96	374	8.0	12	435	25.0	12.7
400	16	400	540	24	230	96	424	8.0	16	495	25.0	12.7
450	18	450	605	24	230	96	474	8.0	16	555	25.0	12.7
500	20	500	655	24	230	96	524	8.0	20	605	25.0	12.7
550	22	550	720	26	230	104	576	8.0	20	665	27.0	12.7
600	24	600	770	26	230	104	626	8.0	20	715	27.0	12.7

JIS 5K

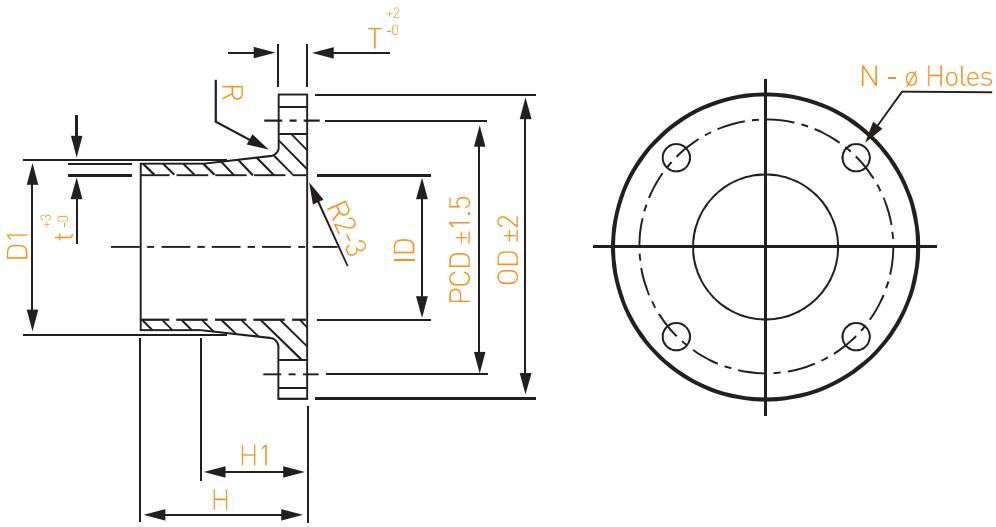

Dimension Table

According to JIS 5K

Nominal Diameter		Flange Data				Hub Data			Drilling Data			Radius
		ID	OD	T	H	H1	D1	t min	N	PCD	ø h	R
mm	inch	mm	mm	mm	mm	mm	mm	mm	holes	mm	mm	mm
650	26	650	825	26	230	104	676	8.0	24	770	27.0	12.7
700	28	700	875	26	230	104	726	8.0	24	820	27.0	12.7
750	30	750	945	28	230	112	778	8.0	24	880	33.0	12.7
800	32	800	995	28	230	112	828	8.0	24	930	33.0	12.7
850	34	850	1,045	28	230	112	878	8.0	24	980	33.0	12.7
900	36	900	1,095	30	230	120	930	8.0	24	1,030	33.0	12.7
1,000	40	1,000	1,195	32	230	128	1,032	8.0	28	1,130	33.0	12.7
1,100	44	1,100	1,305	32	230	128	1,132	8.0	28	1,240	33.0	12.7
1,200	48	1,200	1,420	34	230	136	1,234	8.0	32	1,350	33.0	12.7
1,350	54	1,350	1,575	34	230	136	1,384	8.0	32	1,505	33.0	12.7
1,500	60	1,500	1,730	36	230	144	1,536	8.0	36	1,660	33.0	12.7

JIS 10K

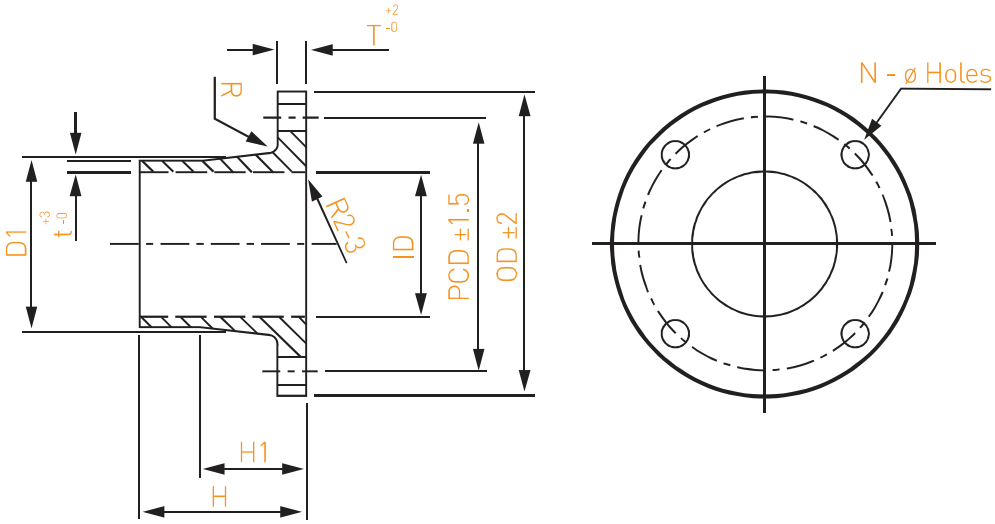

Dimension Table

According to JIS 10K

Nominal Diameter		Flange Data				Hub Data			Drilling Data			Radius
		ID	OD	T	H	H1	D1	t min	N	PCD	ø h	R
mm	inch	mm	mm	mm	mm	mm	mm	mm	holes	mm	mm	mm
20	3/4	20	100	14	200	56	34	5.0	4	75	15.0	12.7
25	1	25	125	14	200	56	39	5.0	4	90	19.0	12.7
40	1 1/2	40	140	16	200	64	56	5.0	4	105	19.0	12.7
50	2	50	155	16	200	64	66	5.0	4	120	19.0	12.7
65	2 1/2	65	175	18	200	72	83	5.0	4	140	19.0	12.7
80	3	80	185	18	200	72	98	6.0	8	150	19.0	12.7
100	4	100	210	18	200	72	118	6.0	8	175	19.0	12.7
125	5	125	250	20	230	80	145	6.0	8	210	23.0	12.7
150	6	150	280	22	230	88	172	6.0	8	240	23.0	12.7
200	8	200	330	22	230	88	222	8.0	12	290	23.0	12.7
250	10	250	400	24	230	96	274	8.0	12	355	25.0	12.7
300	12	300	445	24	230	96	324	8.0	16	400	25.0	12.7
350	14	350	490	26	230	104	376	8.0	16	445	25.0	12.7
400	16	400	560	28	230	112	428	8.0	16	510	27.0	12.7
450	18	450	620	30	230	120	480	8.0	20	565	27.0	12.7
500	20	500	675	3	230	12	503	8.0	20	620	27.0	12.7
550	22	550	745	32	230	128	582	8.0	20	680	33.0	12.7
600	24	600	795	32	230	128	632	8.0	24	730	33.0	12.7

JIS 10K

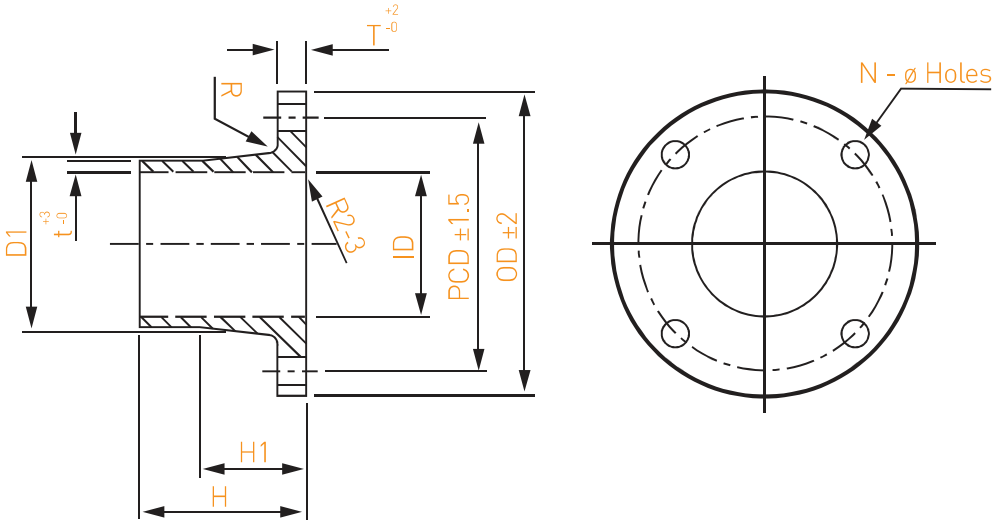

Dimension Table

According to JIS 10K

Nominal Diameter		Flange Data				Hub Data			Drilling Data			Radius
		ID	OD	T	H	H1	D1	t min	N	PCD	ø h	R
mm	inch	mm	mm	mm	mm	mm	mm	mm	holes	mm	mm	mm
650	26	650	845	34	230	136	684	8.0	24	780	33.0	12.7
700	28	700	905	34	230	136	734	8.0	24	840	33.0	12.7
750	30	750	970	36	230	144	786	8.0	24	900	33.0	12.7
800	32	800	1,020	36	230	144	836	8.0	28	950	33.0	12.7
850	34	850	1,070	36	230	144	886	8.0	28	1,000	33.0	12.7
900	36	900	1,120	38	230	152	938	8.0	28	1,050	33.0	12.7
1,000	40	1,000	1,235	40	230	160	1,040	8.0	28	1,160	39.0	12.7
1,100	44	1,100	1,345	42	230	168	1,142	8.0	28	1,270	39.0	12.7
1,200	48	1,200	1,465	44	230	176	1,244	8.0	32	1,380	39.0	12.7
1,350	54	1,350	1,630	48	230	192	1,398	8.0	36	1,540	45.0	12.7
1,500	60	1,500	1,795	50	230	200	1,550	8.0	40	1,700	45.0	12.7